DocuSign Envelope ID: 764A1ECC-8EEF-413E-8A93-2EA31CE938CD

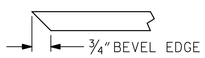

SECTION "F"

(SEE NOTES)

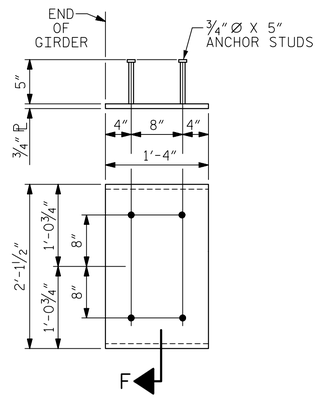

EMBEDDED PLATE "B-1" DETAILS FOR AASHTO TYPE IV GIRDER

(2 REQ'D PER GIRDER)

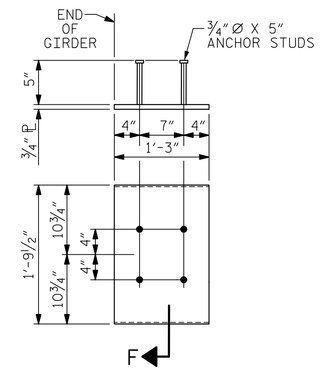

EMBEDDED PLATE "B-1" DETAILS FOR AASHTO TYPE III GIRDER

(2 REQ'D PER GIRDER)

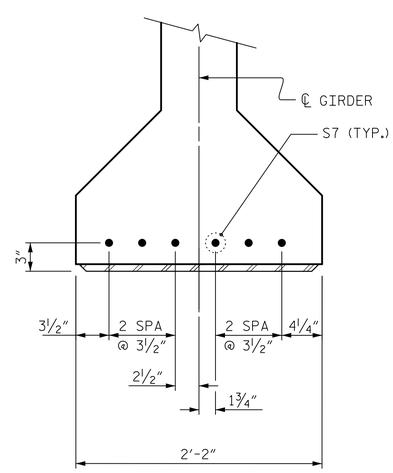

DETAIL "A"

(FOR AASHTO TYPE IV GIRDERS)

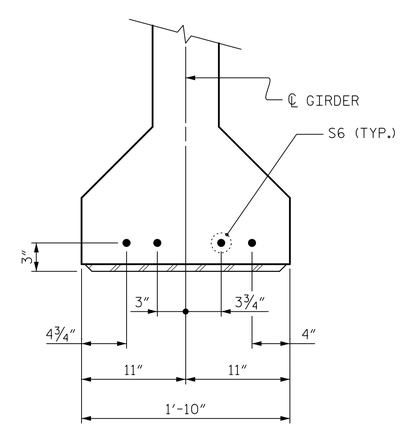

DETAIL "B"

(FOR AASHTO TYPE III GIRDERS)

NOTES

ALL PRESTRESSING STRANDS SHALL BE 7-WIRE LOW-RELAXATION GRADE 270 STRANDS AND SHALL CONFORM TO AASHTO M203 EXCEPT FOR SAMPLING REQUIREMENTS WHICH SHALL BE IN ACCORDANCE WITH THE STANDARD SPECIFICATIONS.

ALL REINFORCING STEEL SHALL BE GRADE 60.

APPLY EPOXY PROTECTIVE COATING TO END OF GIRDER SURFACES INDICATED IN ELEVATION VIEW AND 2' ON BOTH SIDES AND BOTTOM.

EMBEDDED PLATE "B-1" SHALL BE GALVANIZED IN ACCORDANCE WITH THE STANDARD SPECIFICATIONS.

ANCHOR STUDS SHALL CONFORM TO AASHTO M169 GRADES 1010 THROUGH 1020 OR APPROVED EQUAL, AND SHALL MEET THE TYPE "B" REQUIREMENTS OF SUBSECTION 7.3 OF THE ANSI/AASHTO/AWS D1.5 BRIDGE WELDING CODE.

AT ENDS OF GIRDERS TO BE EMBEDDED IN CONCRETE DIAPHRAGMS OR END WALLS, PRESTRESSING STRANDS MAY EXTEND A MAXIMUM OF 2" BEYOND THE GIRDER ENDS. OTHERWISE, PRESTRESSING STRANDS SHALL BE CUT FLUSH WITH THE GIRDER ENDS.

THE TRANSFER OF LOAD FROM THE ANCHORAGES TO THE GIRDER SHALL BE DONE WHEN CONCRETE HAS REACHED A COMPRESSIVE STRENGTH OF NOT LESS THAN 6,400 (SPANS A & B) AND 4,800 (SPANS C & D) PSI.

DEPENDING ON THE TYPE OF SYSTEM USED TO SUPPORT THE DECK SLAB FORMS, PRESET ANCHORS MAY BE NECESSARY IN THE PRESTRESSED CONCRETE GIRDER.

THE TOP SURFACE OF THE GIRDER, EXCLUDING THE OUTSIDE 4", SHALL BE RAKED TO A DEPTH OF 1/4".

THE CONTRACTOR HAS THE OPTION TO PROVIDE, AT NO ADDITIONAL COST TO THE DEPARTMENT, 2 ADDITIONAL STRANDS AT THE TOP OF THE GIRDER TO FACILITATE TYING OF THE REINFORCING STEEL. THESE STRANDS SHALL BE PULLED TO A LOAD OF 4500 lbs.

PROJECT NO. U-5748

WAKE COUNTY

STATION: 24+88.00 -L-

SHEET 5 OF 5

AECOM

AECOM TECHNICAL SERVICES OF NC, INC.
5438 WADE PARK BOULEVARD, SUITE 200
RALEIGH, NC 27607
(919) 854-6200 www.aecom.com
AECOM License No. F-0342

NORTH CAROLINA PROFESSIONAL SEAL 030474 ENGINEER JOHN C. MORRISON

DocuSigned by: John C. Morrison 2/10/2023
A2FDE142C82F4AB...

DOCUMENT NOT CONSIDERED FINAL UNLESS ALL SIGNATURES COMPLETED

STATE OF NORTH CAROLINA
DEPARTMENT OF TRANSPORTATION
RALEIGH

STANDARD

PRESTRESSED CONCRETE GIRDER CONTINUOUS FOR LIVE LOAD DETAILS

REVISIONS						SHEET NO.
NO.	BY:	DATE:	NO.	BY:	DATE:	S1-22
1			3			TOTAL SHEETS
2			4			119

ASSEMBLED BY : M. CATER	DATE : 10/2020	
CHECKED BY : J.C. MORRISON	DATE : 05/2021	
DRAWN BY : ELR 8/91	REV. 10/1/11	MAA/GM
CHECKED BY : GRP 8/91	REV. 1/15	MAA/TMG
	REV. 12/17	MAA/THC

STD. NO. PCG9

DATE: 2/9/2023
TIME: 12:37:50 PM
USER: caterm
DGN: pw:\\aecom-na-pw.bentley.com:AECOM_DS2_WA_2020\Documents\60609754-U-5748 Ligon Mill\900-CAD (GIS)\0_CADV70_NCDOT_TIP\Structures\04 Drawings\40_045_U-5748_SMU_D5_S1-22_SHI02\