DocuSign Envelope ID: 764A1ECC-8EEF-413E-8A93-2EA31CE938CD

FOR NOTES, SEE "CONSTRUCTION SEQUENCE" SHEETS, SHEET 4 OF 4.

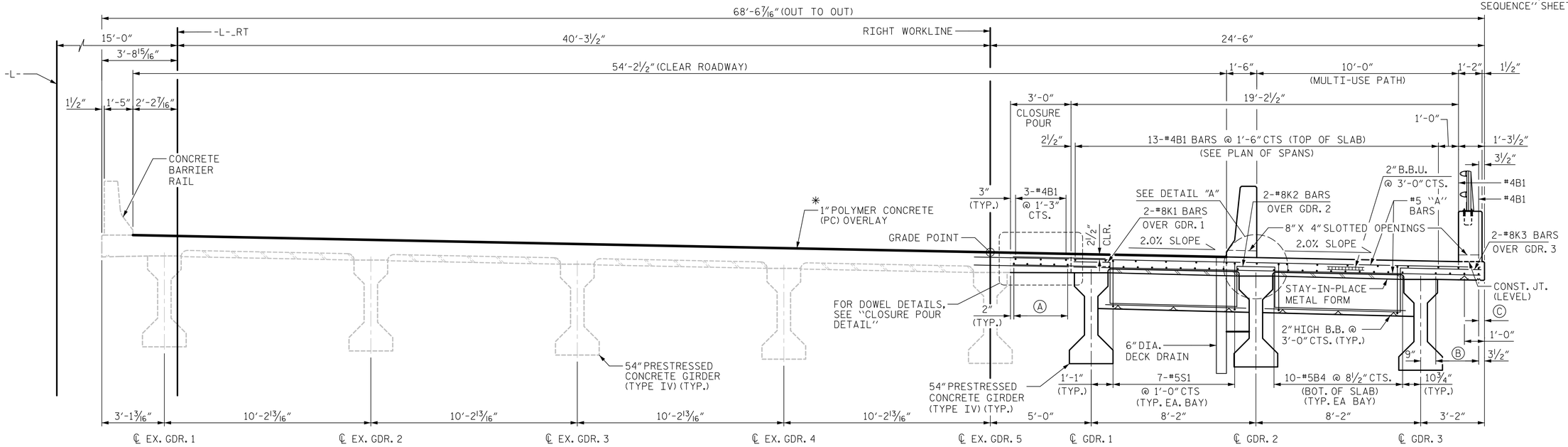

*** PRIOR TO DECK REMOVAL, THE CONTRACTOR SHALL SUBMIT METHOD OF REMOVAL OF EXISTING DECK TO SLAB CUT LINE AS SHOWN IN PLANS. CONTRACTOR SHALL ENSURE MEASURES ARE TAKEN TO PROTECT DECK REINFORCING STEEL DURING REMOVAL OPERATIONS.

TYPICAL SECTION

(END BENT 1 & BENT 2)
(SPAN A & SPAN B)

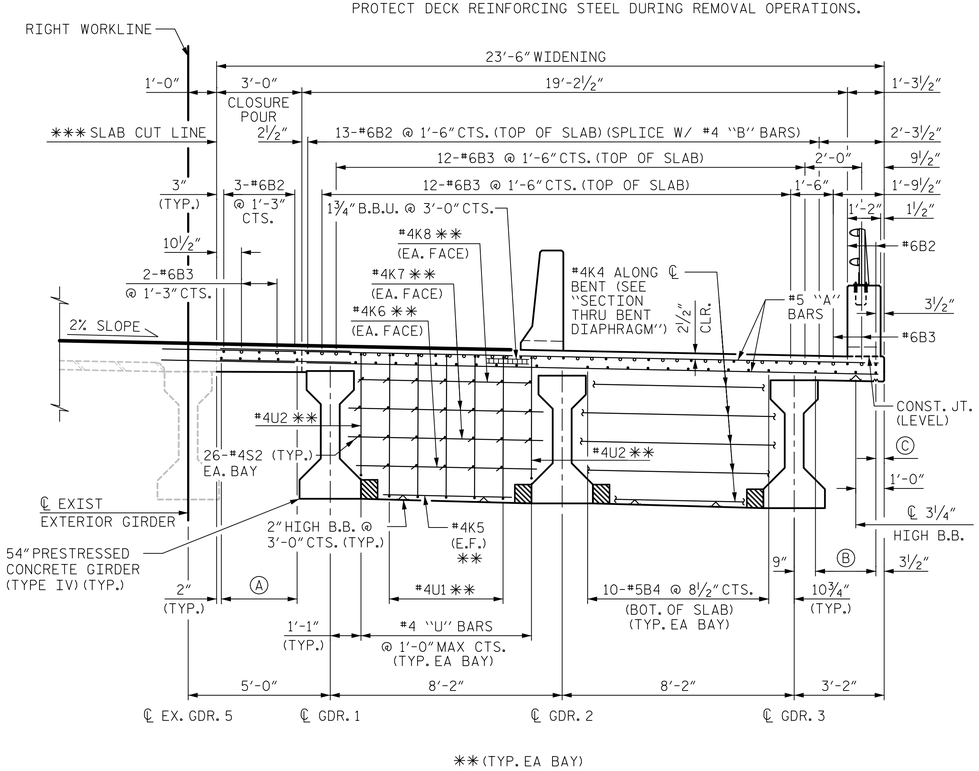

** (TYP. EA BAY)

PARTIAL TYPICAL SECTION

(BENT 1)

"B" BAR KEY

● = CONTINUOUS BAR RUN

○ = NON-CONTINUOUS BAR RUN FOR NEGATIVE MOMENT REGIONS, SEE "PLAN OF SPAN" SHEETS

Ⓐ 5-#5B4 @ 8" CTS. (BOT. OF SLAB) (4 BAR RUN)

Ⓑ 4-#5B4 @ 8 1/2" CTS. (BOT. OF SLAB) (4 BAR RUN) (TYP. EA. OVERHANG)

Ⓒ 3 1/2" TO ℄ 2 - 1" Δ DRIP GROOVES

* DECK SCARIFICATION AND PC OVERLAY INSTALLED AFTER WIDENING IS COMPLETE (IN ROADWAY PORTION ONLY). CONSTRUCT DECK SLAB TO FULL THICKNESS SHOWN. SEE PRESERVATION PLANS.

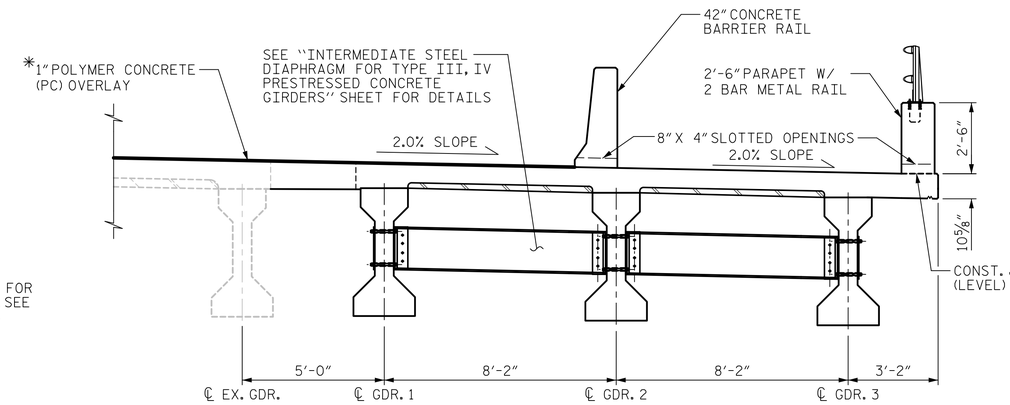

PARTIAL TYPICAL SECTION

(INTERMEDIATE DIAPHRAGMS)
(ALL SPANS)

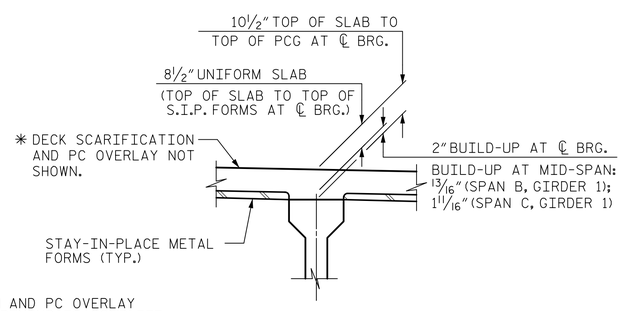

DETAIL "A"

PROJECT NO. U-5748

WAKE COUNTY

STATION: 24+88.00 -L-

SHEET 1 OF 3

DRAWN BY : M. CATER	DATE : 10/2020		
CHECKED BY : J.C. MORRISON	DATE : 12/2022		
DESIGNED BY : D. RITACCO	DATE : 09/2020		
DESIGN CHECKED BY : J.C. MORRISON	DATE : 10/2020		

AECOM
AECOM TECHNICAL SERVICES OF NC, INC.
5438 WADE PARK BOULEVARD, SUITE 200
RALEIGH, NC 27607
(919) 854-6200 www.aecom.com
AECOM License No. F-0342

NORTH CAROLINA PROFESSIONAL SEAL 030474 ENGINEER JOHN C. MORRISON

DocuSigned by: John C. Morrison A2FDE142C82F4AB... 2/10/2023

DOCUMENT NOT CONSIDERED FINAL UNLESS ALL SIGNATURES COMPLETED

STATE OF NORTH CAROLINA
DEPARTMENT OF TRANSPORTATION
RALEIGH

SUPERSTRUCTURE

TYPICAL SECTIONS

(NORTHBOUND LANES)

REVISIONS								SHEET NO.
NO.	BY:	DATE:	NO.	BY:	DATE:			S1-10
1			3					TOTAL SHEETS
2			4					119

DATE: 2/9/2023 TIME: 12:35:38 PM
DATE: 2/10/2023 TIME: 12:35:38 PM
USER: cafarm
DGN: /w:\aecom-na-pw.bentley.com=AECOM_DS2_WA_2020\Documents\60609754-U-5748 Lipon Mill\900-CAD (US)\90_CADTO_NCDOT_TIP\Structures\04 Drawings\401_02\U-5748_SMU_TS1_S1-10_SW02\