DocuSign Envelope ID: 8C2911C7-766B-40F2-B898-7FB27887543A

WETHERILL ENGINEERING
1223 Jones Franklin Rd.
Raleigh, N.C. 27606
License No. F-0377
Bus: 919 851 8077
Fax: 919 851 8107
TRANSPORTATION PLANNING/DESIGN - BRIDGE/STRUCTURE DESIGN
CIVIL/SITE DESIGN - GIS/GPS - CONSTRUCTION OBSERVATION

PROJECT REFERENCE NO.	SHEET NO.
B-5985A	2A-1

ROADWAY DESIGN ENGINEER
2/20/2023
NORTH CAROLINA PROFESSIONAL SEAL 022999 ENGINEER GREG S. PURVIS
Greg S. Purvis

PAVEMENT DESIGN ENGINEER
2/21/2023
NORTH CAROLINA PROFESSIONAL SEAL 22896 ENGINEER CLARK S. MORRISON
Clark S. Morrison

DOCUMENT NOT CONSIDERED FINAL UNLESS ALL SIGNATURES COMPLETED

PAVEMENT SCHEDULE

(FINAL PAVEMENT DESIGN)

C1	PROP. APPROX. 1½" ASPHALT CONCRETE SURFACE COURSE, TYPE S9.5C, AT AN AVERAGE RATE OF 168 LBS. PER SQ. YD.	R1	2'-6" CONCRETE CURB AND GUTTER.
C2	PROP. APPROX. 3" ASPHALT CONCRETE SURFACE COURSE, TYPE S9.5C, AT AN AVERAGE RATE OF 168 LBS. PER SQ. YD. IN EACH OF TWO LAYERS.	R2	9" X 12" CONCRETE CURB
C3	PROP. VAR. DEPTH ASPHALT CONCRETE SURFACE COURSE, TYPE S9.5C, AT AN AVERAGE RATE OF 112 LBS. PER SQ. YD. PER 1" DEPTH. TO BE PLACED IN LAYERS NOT TO EXCEED 2" IN DEPTH.	S1	4" CONCRETE SIDEWALK.
D1	PROP. APPROX. 4" ASPHALT CONCRETE INTERMEDIATE COURSE, TYPE I19.0C, AT AN AVERAGE RATE OF 456 LBS. PER SQ. YD.	T	EARTH MATERIAL.
D2	PROP. VAR. DEPTH ASPHALT CONCRETE INTERMEDIATE COURSE, TYPE I19.0C, AT AN AVERAGE RATE OF 114 LBS. PER SQ. YD. PER 1" DEPTH, TO BE PLACED IN LAYERS NOT LESS THAN 2½" IN DEPTH OR GREATER THAN 4" IN DEPTH.	U	EXISTING PAVEMENT.
E1	PROP. APPROX. 4" ASPHALT CONCRETE BASE COURSE, TYPE B25.0C, AT AN AVERAGE RATE OF 456 LBS. PER SQ. YD.	V1	MILLING ASPHALT PAVMENT, 0 TO 1½" DEPTH
E2	PROP. VAR. DEPTH ASPHALT CONCRETE BASE COURSE, TYPE B25.0C, AT AN AVERAGE RATE OF 114 LBS. PER SQ. YD. PER 1" DEPTH. TO BE PLACED IN LAYERS NOT LESS THAN 3" IN DEPTH OR GREATER THAN 5½" IN DEPTH.	V2	MILLING ASPHALT PAVMENT, 1½" DEPTH
		W1	VARIABLE DEPTH ASPHALT PAVEMENT (SEE STANDARD WEDGING DETAIL SHEET No. 2A-1)

NOTE: PAVEMENT EDGE SLOPES ARE 1:1 UNLESS SHOWN OTHERWISE

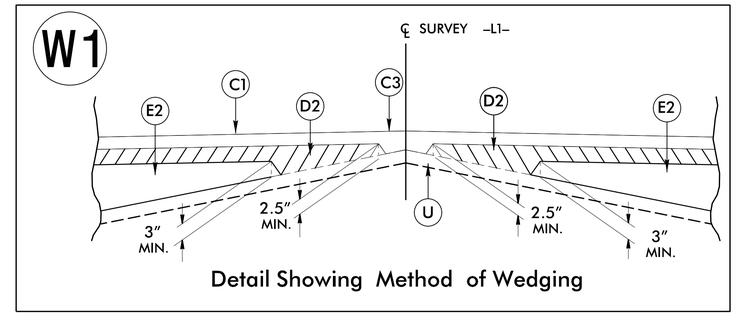

Detail Showing Method of Wedging

MILLING AT PAVEMENT TIE–INS

NOTES TO CONTRACTOR

For surface mixes over 1" in thickness, mill the existing pavement in accordance with the following sketch as directed by the Engineer.

Locations shall include ties into existing concrete pavement, at bridge approaches where the bridge will not be resurfaced, and at the beginning and ending point of each resurfacing map.

Perform the work in accordance with Section 607 of the January 2018 North Carolina Department of Transportation Standard Specifications for Roads and Structures. Resurfacing will be accomplished at the same time as the milling operation.

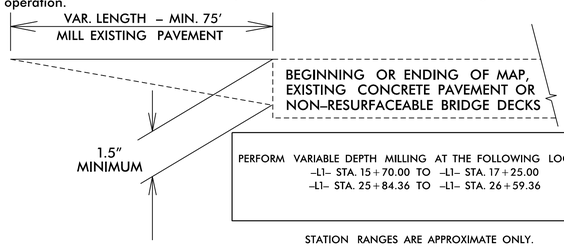

PERFORM VARIABLE DEPTH MILLING AT THE FOLLOWING LOCATIONS:
–L1– STA. 15+70.00 TO –L1– STA. 17+25.00
–L1– STA. 25+84.36 TO –L1– STA. 26+59.36

STATION RANGES ARE APPROXIMATE ONLY. GRADE MAY BE ADJUSTED BY ENGINEER TO ENSURE A PROPER TIE–IN

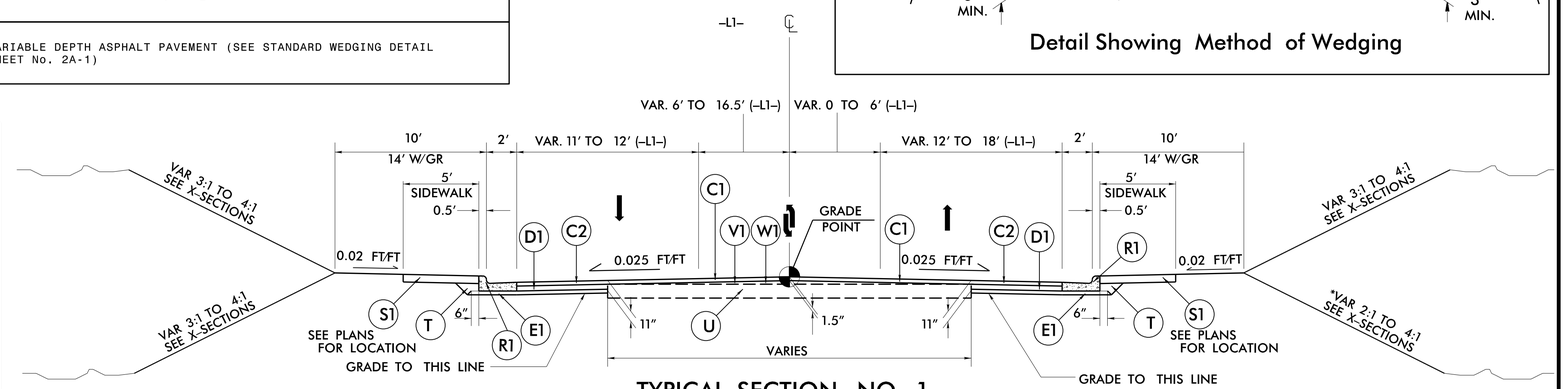

NOTE: USE MILLING DETAIL IN CONJUNCTION WITH TYPICAL SECTION NO. 1

–L1– STA. 15+70.00 TO –L1– STA. 18+40.00
–L1– STA. 25+53.50 TO –L1– STA. 26+59.36

TYPICAL SECTION NO. 1

–L1– STA. 15+70.00 TO –L1– STA. 18+40.00
–L1– STA. 18+40.00 TO –L1– STA. 21+58.50
–L1– STA. 25+53.50 TO –L1– STA. 26+59.36

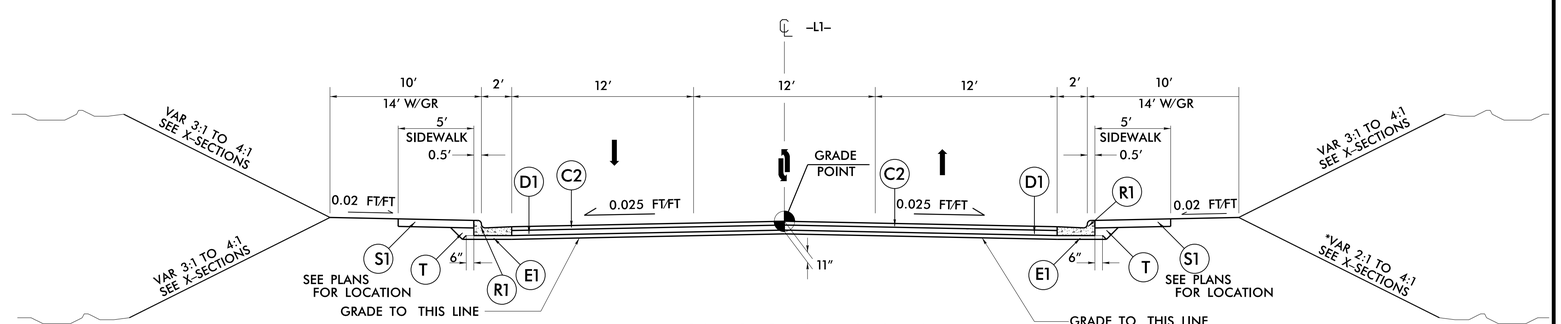

TYPICAL SECTION NO. 2

–L1– STA. 21+58.50 TO –L1– STA. 22+08.50 (BEGIN BRIDGE)
–L1– STA. 25+03.50 (END BRIDGE) TO –L1– STA. 25+53.50

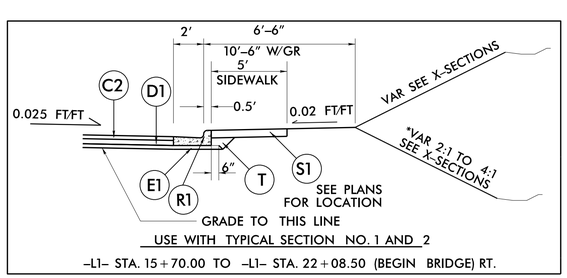

USE WITH TYPICAL SECTION NO. 1 AND 2

–L1– STA. 15+70.00 TO –L1– STA. 22+08.50 (BEGIN BRIDGE) RT.

6/2/99
2/18/2023
B-5985A_rdy_psh_2A-1.dgn
USER: gpurvis