DocuSign Envelope ID: 7FA703F9-8D43-407A-9F63-80C534FE36C2

HNTB NORTH CAROLINA, P.C.
343 E. Six Forks Road, Suite 200
Raleigh, North Carolina 27609
NC License No: C-1554

PROJECT REFERENCE NO.	SHEET NO.
P-5705A	2A-3
R/W SHEET NO.	

DATE: NOVEMBER 4, 2022

DOCUMENT NOT CONSIDERED FINAL UNLESS ALL SIGNATURES COMPLETED

RAILROAD DESIGN ENGINEER

NORTH CAROLINA PROFESSIONAL SEAL 037992 ENGINEER JOSEPH P. PETRITZ

DocuSigned by: 1C8B6D2D3B44D... 11/4/2022

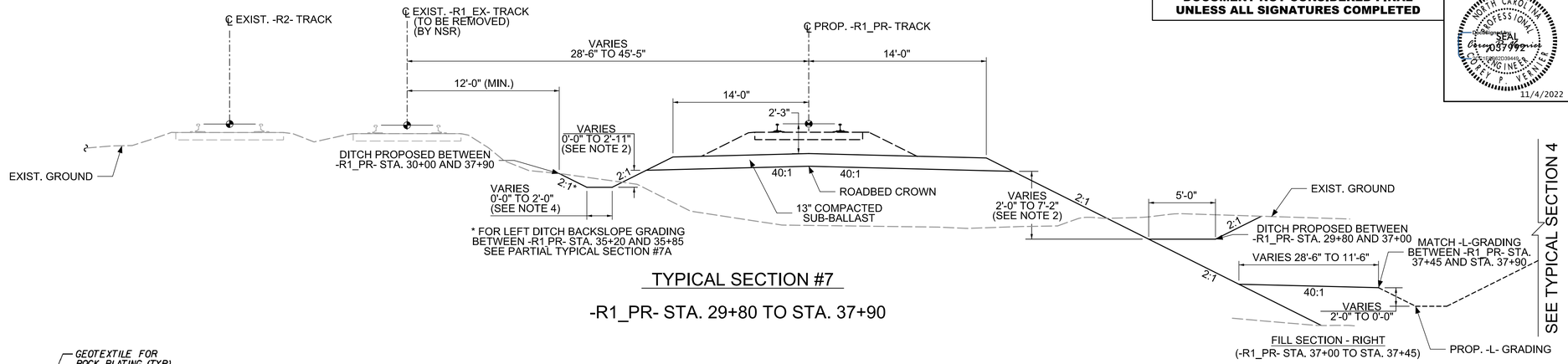

TYPICAL SECTION #7

-R1_PR- STA. 29+80 TO STA. 37+90

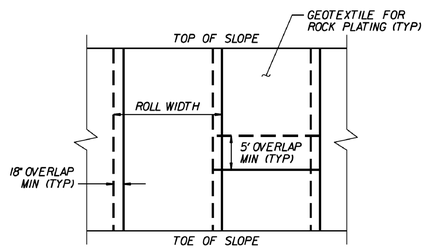

GEOTEXTILE OVERLAP DETAIL

(PLAN VIEW)

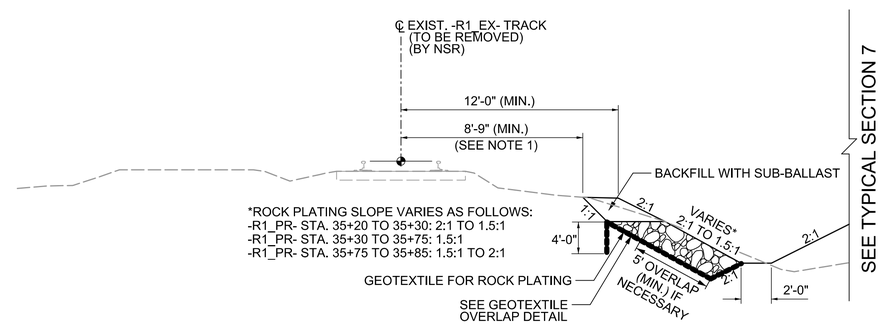

PARTIAL TYPICAL SECTION #7A

-R1_PR- STA. 35+20 TO STA. 35+85

NOTES

1. DIMENSION SHOWN IS FOR BIDDING PURPOSES ONLY AND MUST BE COORDINATED WITH THE NORFOLK SOUTHERN REPRESENTATIVE PRIOR TO CONSTRUCTION. SEE 'EXCAVATION ADJACENT TO ACTIVE TRACK DETAIL' FOR REQUIREMENTS.
2. DITCH ELEVATIONS ARE CONTROLLED BY SPECIAL DITCH GRADES SHOWN ON THE PROFILES.
3. THE PROPOSED ACCESS ROAD RIGHT WIDTH VARIES ACCORDING TO THE FOLLOWING:
   -R1_PR- STA. 37+90.00 TO STA. 38+45.27: 13'-11" TO 8'-0"
   -R1_PR- STA. 38+45.27 TO STA. 38+60.00: 8'-0"
4. LEFT DITCH WIDTH VARIES BASED ON TRACK CENTERS AND DITCH DEPTH. THE LEFT DITCH WIDTHS VARY ACCORDING TO THE FOLLOWING:
   -R1_PR- STA. 30+00.00 TO STA. 30+60.00: 0'-0"
   -R1_PR- STA. 30+60.00 TO STA. 31+10.00: 0'-0" TO 2'-0"
   -R1_PR- STA. 31+10.00 TO STA. 36+40.00: 2'-0"
   -R1_PR- STA. 36+40.00 TO STA. 37+00.00: 2'-0" TO 0'-0"
   -R1_PR- STA. 37+00.00 TO STA. 37+90.00: 0'-0"
5. THE TYPICAL SECTIONS TAKE PRECEDENCE OVER THE CROSS SECTIONS. CROSS SECTIONS ARE PROVIDED FOR REFERENCE ONLY.

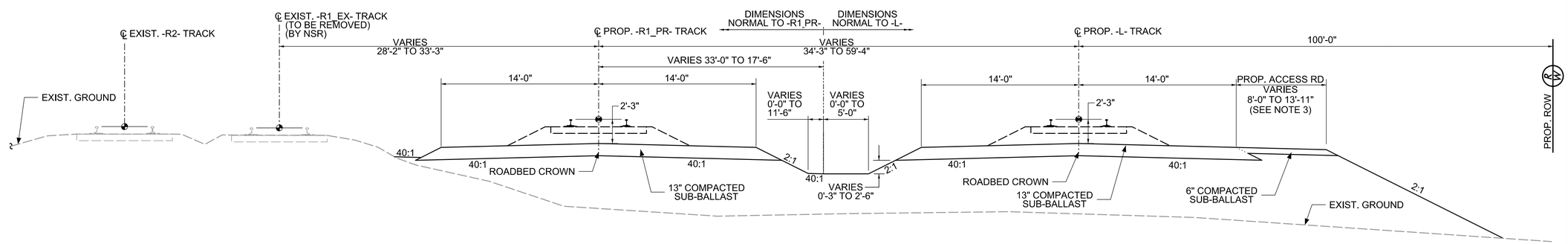

TYPICAL SECTION #8

-R1_PR- STA. 37+90 TO STA. 38+60
(-L- STA. 26+94.36 TO STA. 27+64.60)

11/2/2022
P5705a_psh_2A_3.dgn
HNTB