DocuSign Envelope ID: AF35AE94-8CF6-4059-8CA9-D14342CA853A

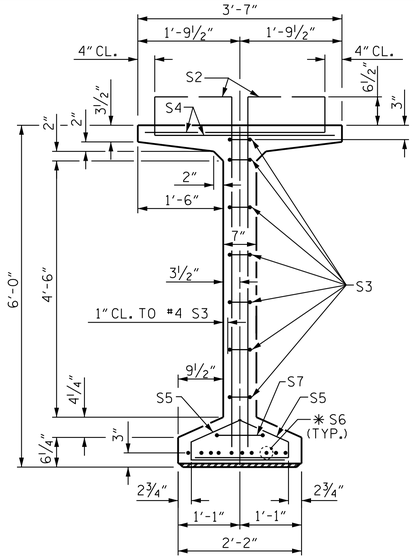

SECTION A-A

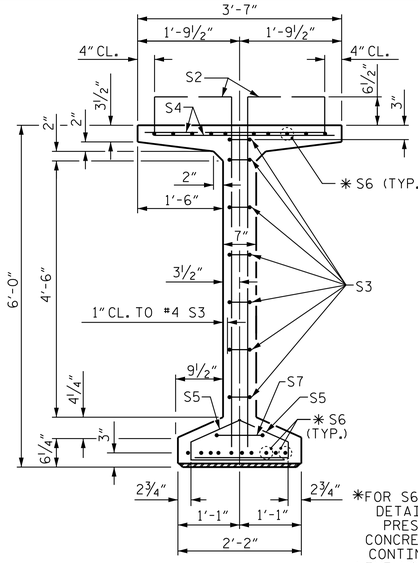

SECTION B-B

✱FOR S6 BARS. SEE DETAIL "C" OF PRESTRESSED CONCRETE GIRDER CONTINUOUS FOR LIVE LOAD DETAILS SHEET 4 OF 5

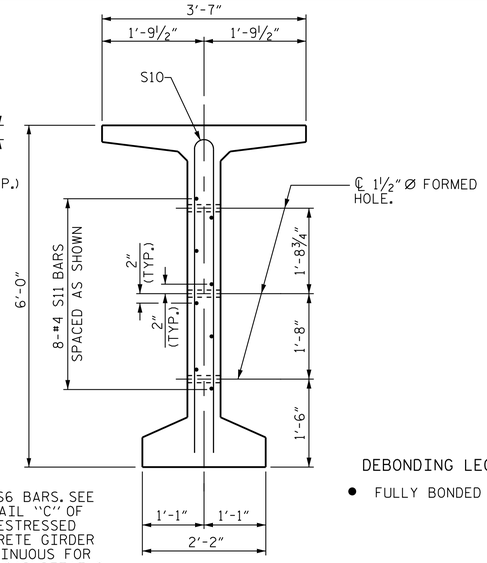

SECTION C-C

(S1, S4 AND S9 BARS NOT SHOWN)

DEBONDING LEGEND

● FULLY BONDED STRANDS

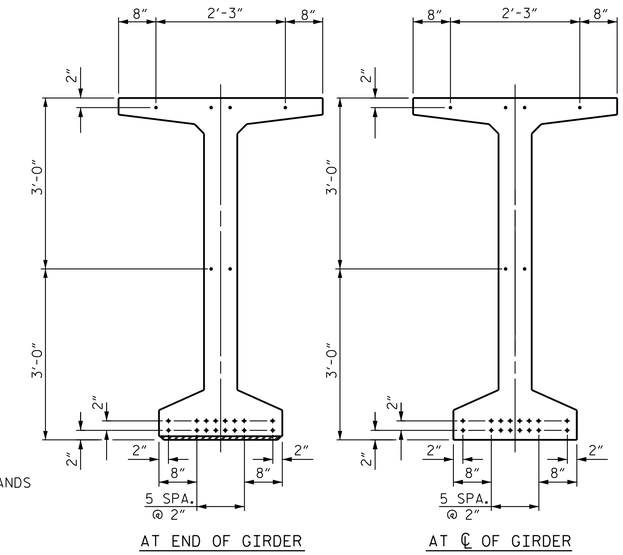

0.6" Ø LOW RELAXATION STRAND LAYOUT

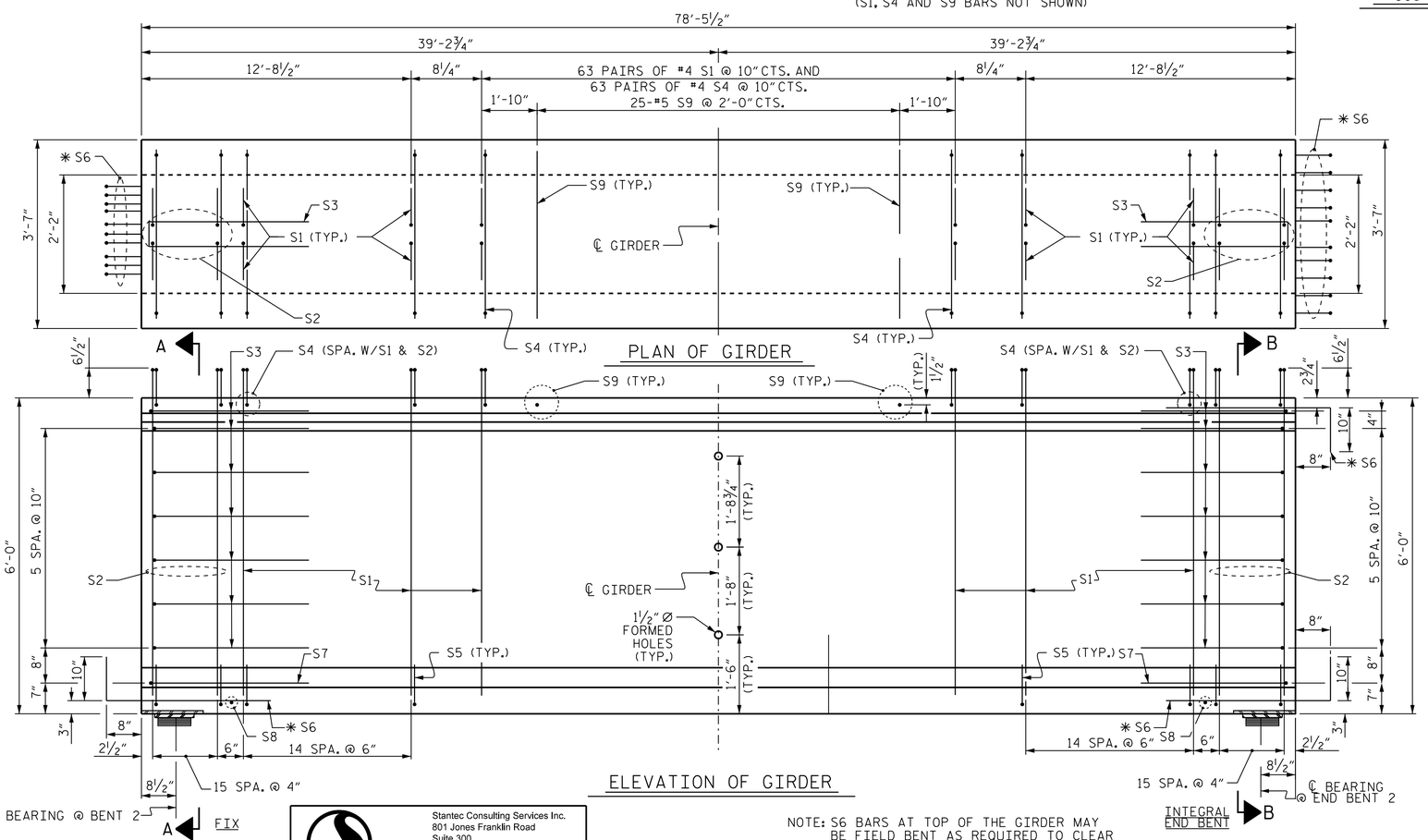

ELEVATION OF GIRDER

NOTE: S6 BARS AT TOP OF THE GIRDER MAY BE FIELD BENT AS REQUIRED TO CLEAR APPROACH SLABE PAVEMENT NOTCH.

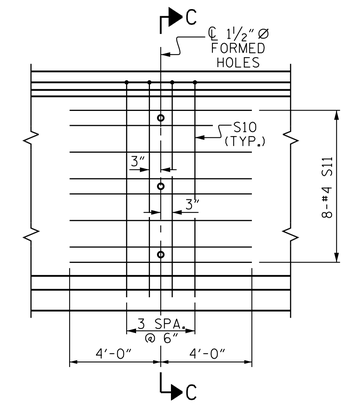

PARTIAL ELEVATION

SHOWING INTERMEDIATE STEEL DIAPHRAGM REINFORCING STEEL FOR ALL GIRDERS

0.6" Ø L. R. GRADE 270 STRANDS

AREA (SQUARE INCHES)	ULTIMATE STRENGTH (LBS. PER STRAND)	APPLIED PRESTRESS (LBS. PER STRAND)
0.217	58,600	43,950

REINFORCING STEEL FOR ONE GDR

BAR	NUMBER	SIZE	TYPE	LENGTH	WEIGHT
S1	186	#4	1	6'-10"	850
S2	64	#5	1	6'-10"	457
S3	14	#4	2	16'-5"	154
S4	250	#4	4	4'-4"	724
S5	124	#4	3	3'-0"	249
✱ S6	30	#5	STR	3'-8"	115
S7	2	#5	2	17'-0"	36
S8	2	#3	STR	1'-10"	2
S9	25	#5	STR	3'-3"	85
S10	4	#5	5	11'-6"	48
S11	8	#4	STR	8'-0"	43

✱ NOTE: S6 BARS SHALL BE BENT BEFORE SHIPMENT. HEAT BENDING SHALL NOT BE ALLOWED.

BAR TYPES

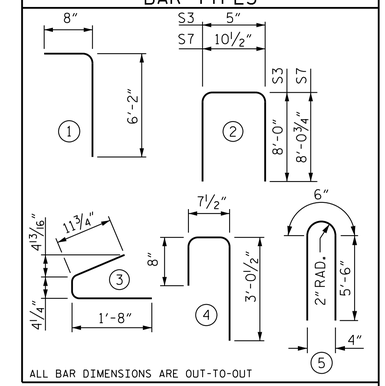

ALL BAR DIMENSIONS ARE OUT-TO-OUT

QUANTITIES FOR ONE GIRDER

	REINFORCING STEEL	5,500 PSI CONCRETE	0.6" Ø L.R. STRANDS
	LB.	C.Y.	No.
	2763	16.8	22

GIRDERS REQUIRED

NUMBER	LENGTH	TOTAL LENGTH
8	78'-5½"	627'-8"

PROJECT NO. R-2707D

CLEVELAND COUNTY

STATION: 849+00.00 -L-

SHEET 3 OF 5

STATE OF NORTH CAROLINA
DEPARTMENT OF TRANSPORTATION
RALEIGH

MODIFIED 72" PRESTRESSED CONCRETE GIRDER CONTINUOUS FOR LIVE LOAD

SPAN C
(RIGHT LANE)

NORTH CAROLINA PROFESSIONAL SEAL 054498 ENGINEER SETH S. POOLE

DocuSigned by:
5/10/2023

DOCUMENT NOT CONSIDERED FINAL UNLESS ALL SIGNATURES COMPLETED

REVISIONS							SHEET NO.
NO.	BY:	DATE:	NO.	BY:	DATE:		S6-24
1			3				TOTAL SHEETS
2			4				56

ASSEMBLED BY : J. B. GEILE DATE : 09/18/18
CHECKED BY : S. S. POOLE DATE : 12/10/22

DRAWN BY : EEM 2/6/97
CHECKED BY : VAP 2/6/97

Stantec
Stantec Consulting Services Inc.
801 Jones Franklin Road
Suite 300
Raleigh, NC 27606
Tel. (919) 851-6866
Fax. (919) 851-7024
www.stantec.com
License No. F-0672

DESIGN ENGINEER OF RECORD: S.S. POOLE DATE : 05/10/23

c:\pw_working\dms55490\R2707D_SMU_G03_22010_revision.dgn 5/10/2023 11:40:24 AM JHagenbush