DocuSign Envelope ID: DE120762-44B4-4D1F-A9A4-C5344EE38051

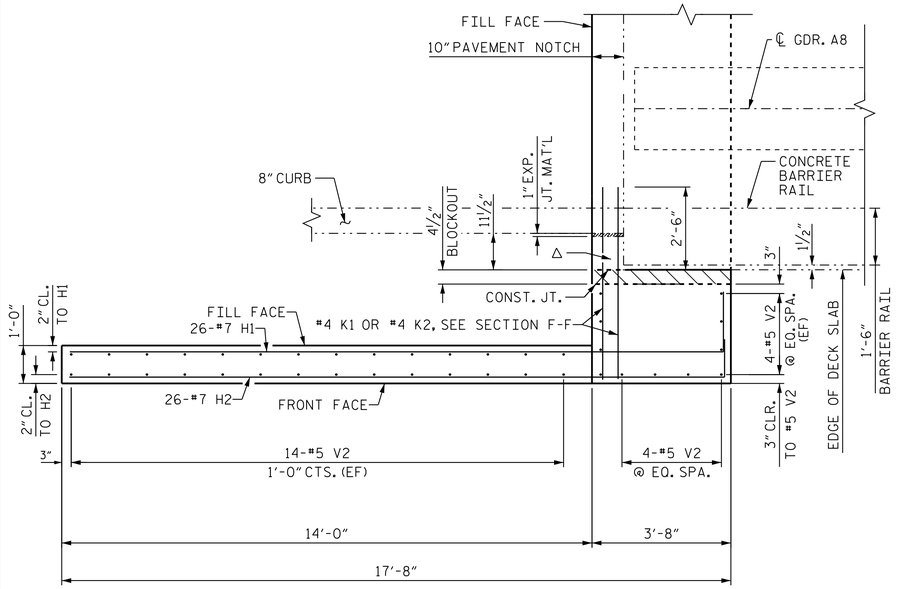

PLAN OF LEFT WING (W3)

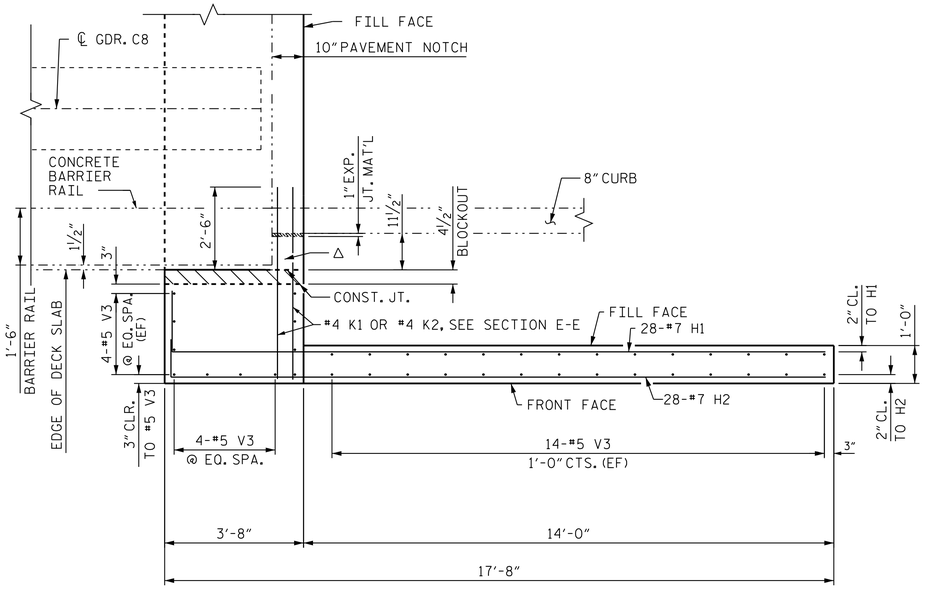

PLAN OF RIGHT WING (W4)

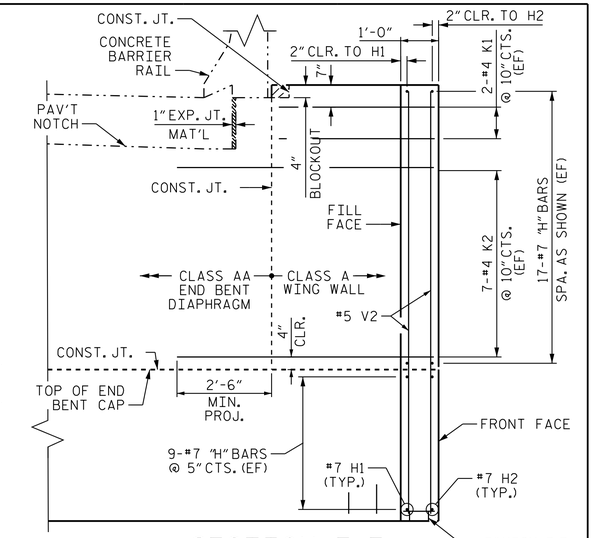

SECTION E-E

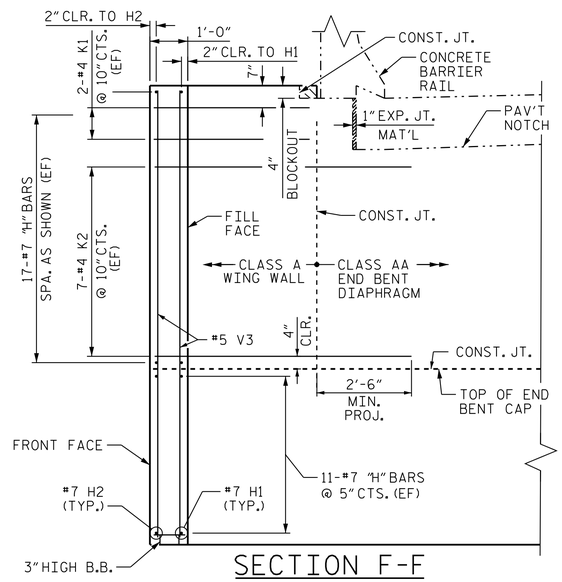

SECTION F-F

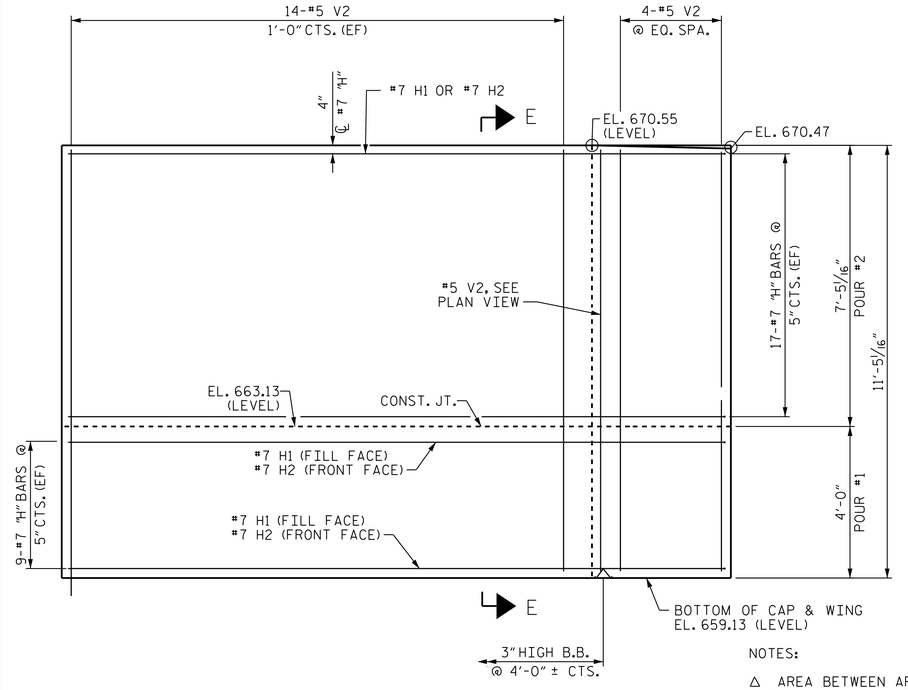

ELEVATION OF LEFT WING (W3)

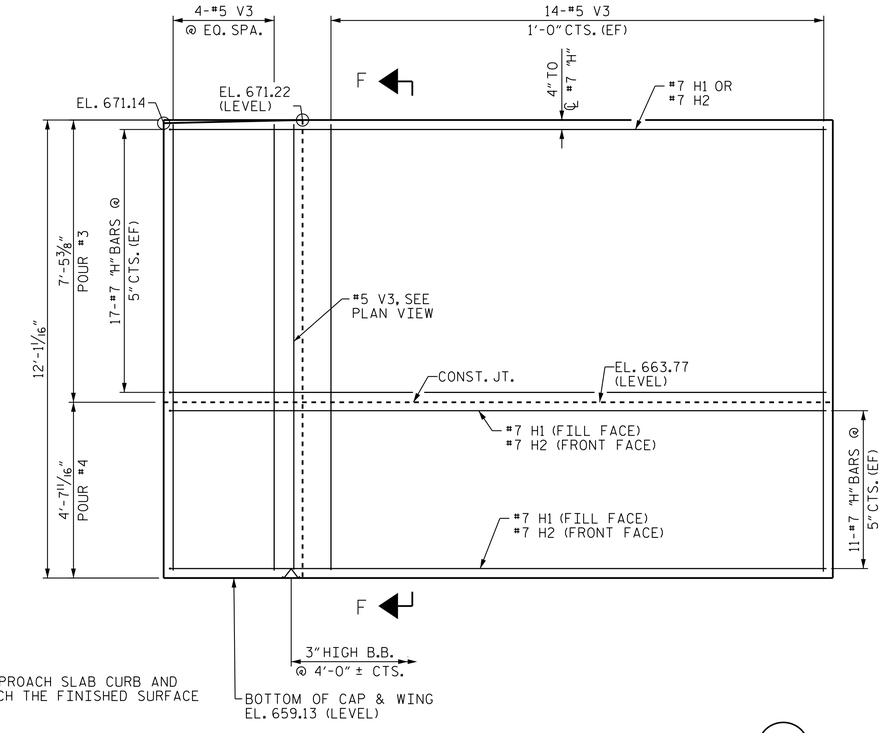

ELEVATION OF RIGHT WING (W4)

NOTES:

△ AREA BETWEEN APPROACH SLAB CURB AND BLOCKOUT SHALL MATCH THE FINISHED SURFACE OF THE BRIDGE DECK.

(EF) DENOTES EACH FACE.

CONCRETE TO BE POURED IN THE HATCHED AREA TO MATCH THE TOP OF THE CURB AND THE INTEGRAL END BENT WING ELEVATION.

THE CONCRETE IN THE HATCHED AREA OF THE WING IS TO BE POURED AFTER THE JOINT BETWEEN THE BRIDGE DECK AND THE APPROACH SLAB HAS BEEN SAWED AND IF SLIP FORMING IS USED, THE BARRIER HAS BEEN CAST.

PROJECT NO. R-2707D

CLEVELAND COUNTY

STATION: 849+00.00 -L-

SHEET 3 OF 5

STATE OF NORTH CAROLINA
DEPARTMENT OF TRANSPORTATION
RALEIGH

SUBSTRUCTURE

END BENT 2 WING DETAILS

(LEFT LANE)

NORTH CAROLINA PROFESSIONAL SEAL 054498 ENGINEER SETH S. POOLE

5/9/2023

DOCUMENT NOT CONSIDERED FINAL UNLESS ALL SIGNATURES COMPLETED

REVISIONS						SHEET NO.
NO.	BY:	DATE:	NO.	BY:	DATE:	S5-50
1			3			TOTAL SHEETS
2			4			56

Stantec
Stantec Consulting Services Inc.
801 Jones Franklin Road
Suite 300
Raleigh, NC 27606
Tel. (919) 851-6866
Fax. (919) 851-7024
www.stantec.com
License No. F-0672

DRAWN BY: J. B. GEILE DATE: 01/08/23
CHECKED BY: S.S. POOLE DATE: 01/10/23
DESIGN ENGINEER OF RECORD: S.S. POOLE DATE: 05/09/23

c:\pw_working\dms5546\R2707D_SMU_E203_220102.dgn 5/9/2023 2:13:55 PM JHagenbush