DocuSign Envelope ID: 55A698DA-4D5F-4999-9136-BB12A22BC12F

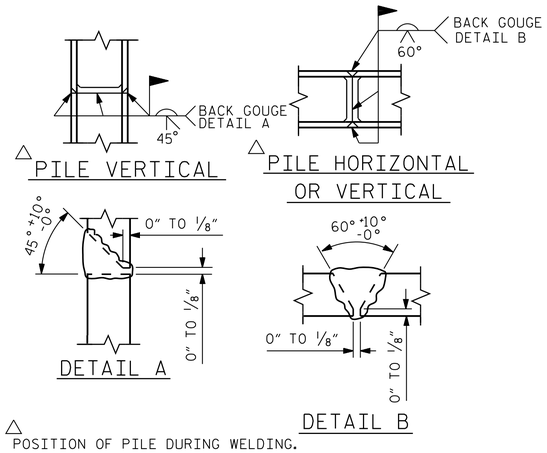

PILE SPLICE DETAILS

PILE	CUTOFF EL.
1	749.99
2	750.48
3	750.96
4	751.45
5	751.93
6	752.42
7	752.91
8	753.39
9	753.88
10	754.36
11	754.85
12	755.34
13	755.82
14	756.31
15	756.79
16	749.64
17	757.06

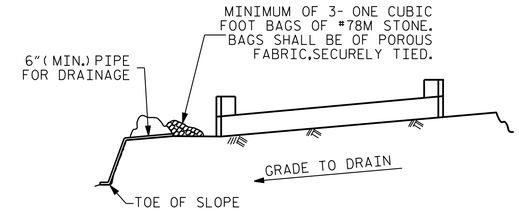

BAGGED STONE AND PIPE SHALL BE PLACED IMMEDIATELY AFTER COMPLETION OF END BENT EXCAVATION. PIPE MAY BE EITHER CONCRETE, CORRUGATED STEEL, CORRUGATED ALUMINUM ALLOY, OR CORRUGATED PLASTIC. PERFORATED PIPE WILL NOT BE ALLOWED.

BAGGED STONE SHALL REMAIN IN PLACE UNTIL THE ENGINEER DIRECTS THAT IT BE REMOVED. THE CONTRACTOR SHALL REMOVE AND DISPOSE OF SILT ACCUMULATIONS AT BAGGED STONE WHEN SO DIRECTED BY THE ENGINEER. BAGS SHALL BE REMOVED AND REPLACED WHENEVER THE ENGINEER DETERMINES THAT THEY HAVE DETERIORATED AND LOST THEIR EFFECTIVENESS.

NO SEPARATE PAYMENT WILL BE MADE FOR THIS WORK AND THE ENTIRE COST OF THIS WORK SHALL BE INCLUDED IN THE UNIT CONTRACT PRICE BID FOR THE SEVERAL PAY ITEMS.

TEMPORARY DRAINAGE AT END BENT

BAR TYPES

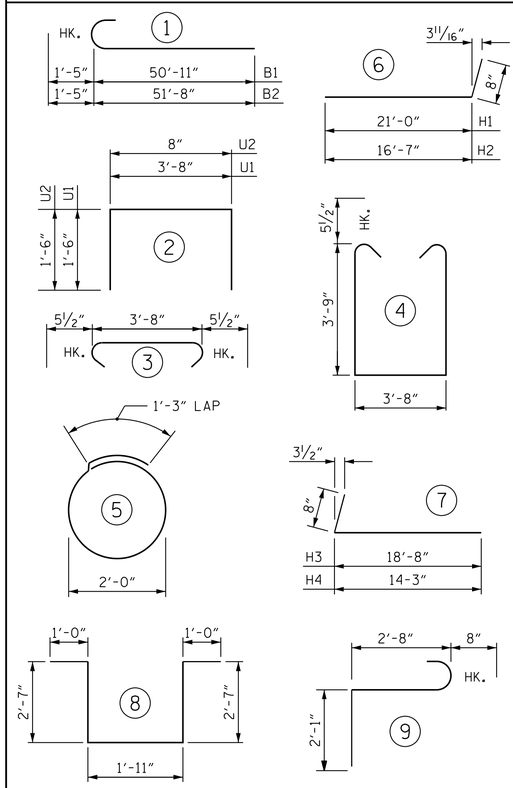

ALL BAR DIMENSIONS ARE OUT TO OUT.

BILL OF MATERIAL

END BENT 1

BAR	NO.	SIZE	TYPE	LENGTH	WEIGHT
B1	12	#10	1	52'-4"	2,702
B2	12	#10	1	53'-1"	2,741
B3	48	#4	STR	34'-1"	1,093
B4	20	#4	STR	3'-6"	47
B5	54	#4	STR	4'-3"	153
H1	10	#4	6	21'-8"	145
H2	16	#4	6	17'-3"	184
H3	10	#4	7	19'-4"	129
H4	14	#4	7	14'-11"	140
K1	30	#4	STR	34'-1"	683
K2	2	#4	STR	3'-0"	4
K3	2	#4	STR	2'-8"	4
K4	2	#4	STR	2'-9"	4
K5	2	#4	STR	2'-5"	3
S1	147	#5	3	12'-1"	1,853
S2	132	#5	4	4'-7"	631
S3	60	#4	5	7'-0"	281
S4	6	#6	8	9'-1"	82
S5	6	#6	9	5'-5"	49
U1	81	#4	2	6'-8"	361
U2	91	#4	2	3'-8"	223
V1	182	#5	STR	7'-1"	1,345
V2	16	#5	STR	8'-9"	146
V3	32	#5	STR	10'-6"	350
V4	28	#5	STR	9'-8"	282

REINFORCING STEEL 13,635 LBS.

CLASS A CONCRETE BREAKDOWN

POUR #1	(LT) CAP, LOWER PART OF WINGS & COLLARS	32.3 C.Y.
POUR #2	(RT) CAP, LOWER PART OF WINGS & COLLARS	36.8 C.Y.
POUR #3	(LT) UPPER PART OF WINGS & BACKWALL	12.8 C.Y.
POUR #4	(RT) UPPER PART OF WINGS & BACKWALL	12.6 C.Y.
TOTAL CLASS A CONCRETE		94.5 C.Y.

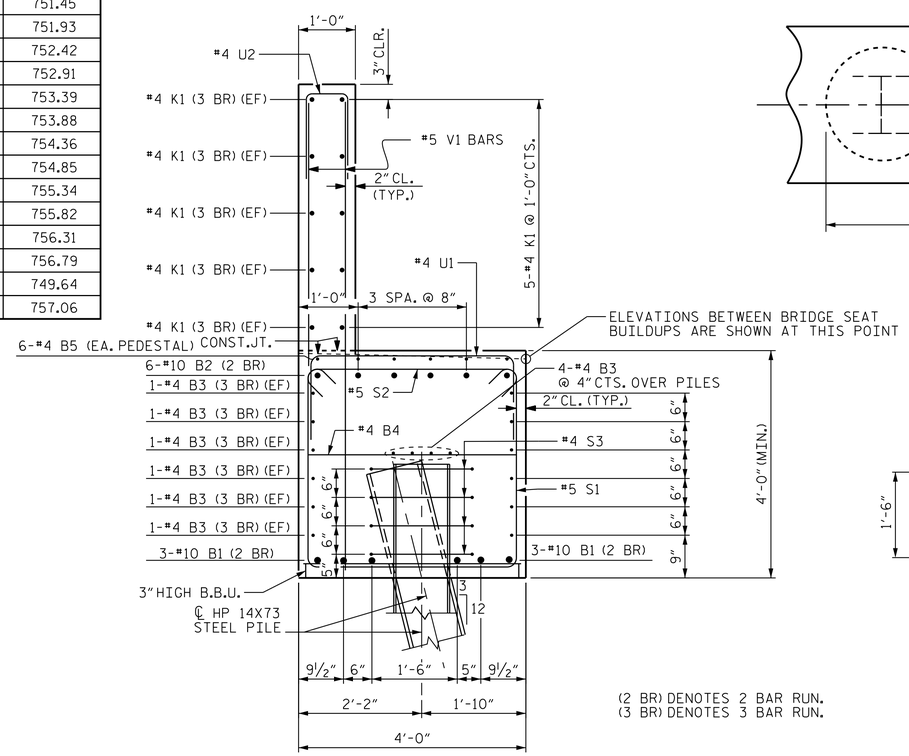

(2 BR) DENOTES 2 BAR RUN.
(3 BR) DENOTES 3 BAR RUN.

SECTION A-A

ANCHOR BOLTS NOT SHOWN FOR CLARITY
SEE "END BENT 1" SHEET 1 OF 4.

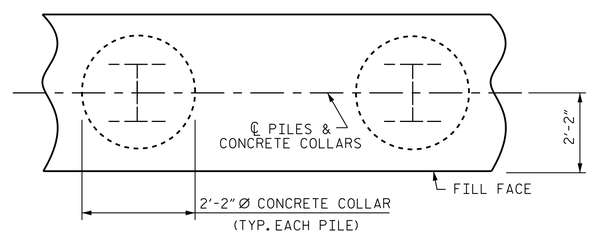

PLAN

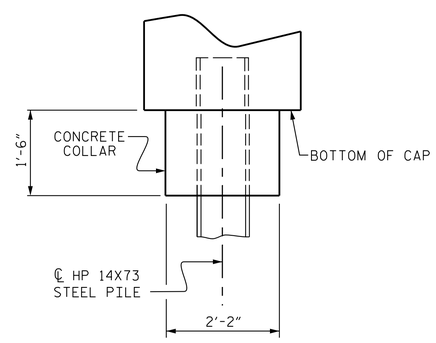

ELEVATION

CORROSION PROTECTION FOR STEEL PILES DETAIL

PRELIMINARY PLANS
DO NOT USE FOR CONSTRUCTION

PROJECT NO. R-2707D
CLEVELAND COUNTY
STATION: 36+78.38 -RAMP A-

SHEET 4 OF 4

STATE OF NORTH CAROLINA
DEPARTMENT OF TRANSPORTATION
RALEIGH

SUBSTRUCTURE

END BENT 1 DETAILS

NORTH CAROLINA PROFESSIONAL SEAL 47083 ENGINEER VICTOR E. FRAGA

DocuSigned by: Victor E. Fraga 5/10/2023

DOCUMENT NOT CONSIDERED FINAL UNLESS ALL SIGNATURES COMPLETED

REVISIONS							
NO.	BY:	DATE:	NO.	BY:	DATE:		
1			3				
2			4				

SHEET NO. S4-31
TOTAL SHEETS 43

Stantec Consulting Services Inc.
801 Jones Franklin Road
Suite 300
Raleigh, NC 27606
Tel. (919) 851-6866
Fax. (919) 851-7024
www.stantec.com
License No. F-0672

DRAWN BY : J. B. GEILE	DATE : 12/16/22	DESIGN ENGINEER OF RECORD: V. E. FRAGA	DATE : 05/09/23
CHECKED BY : V. E. FRAGA	DATE : XX/XX/XX		

c:\users\vfraga\documents\pw_working\dms55432\R2707D_SMU_E104_22049i.dgn 2023-05-05 19:21:15 vfraga