DocuSign Envelope ID: C671D102-8ED1-428A-A1D3-11A9F1F5492A

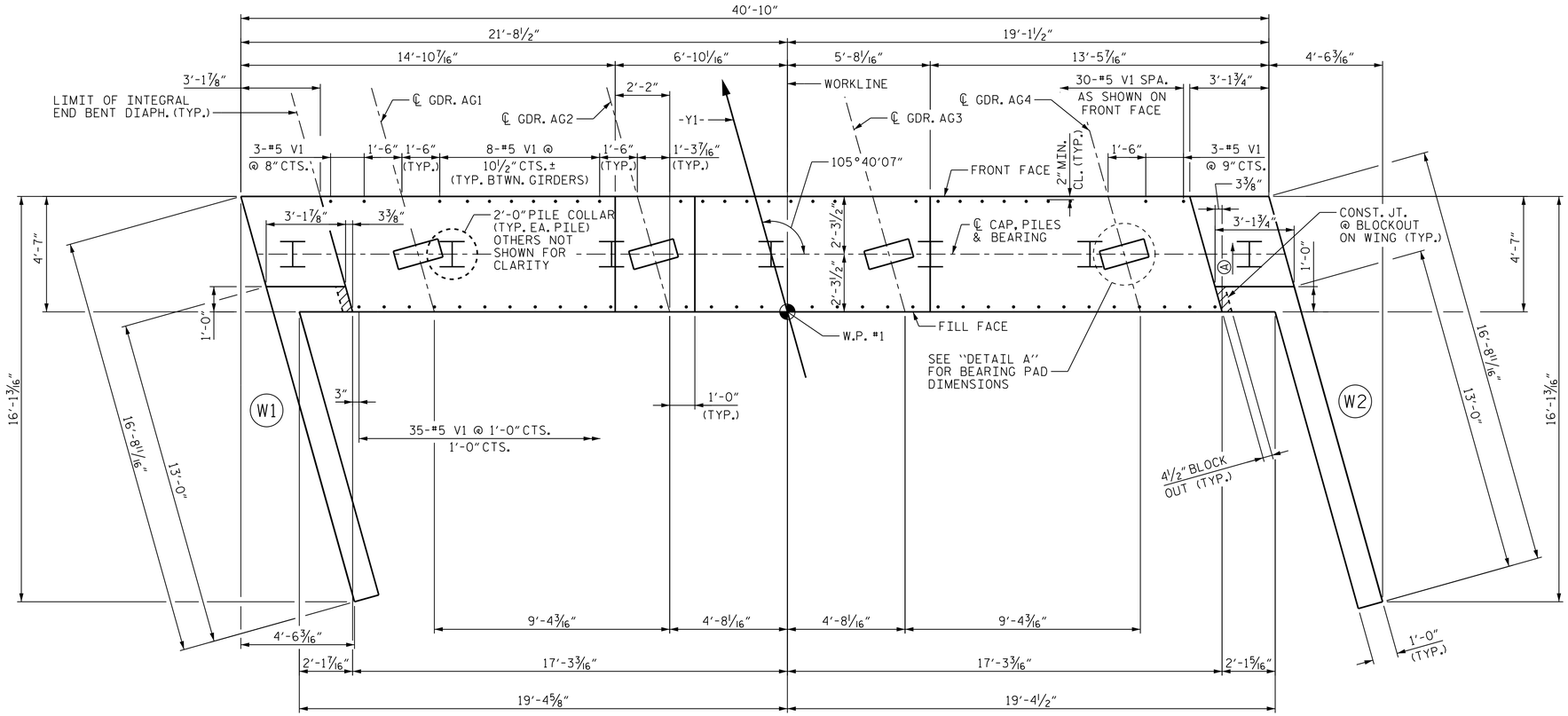

PLAN

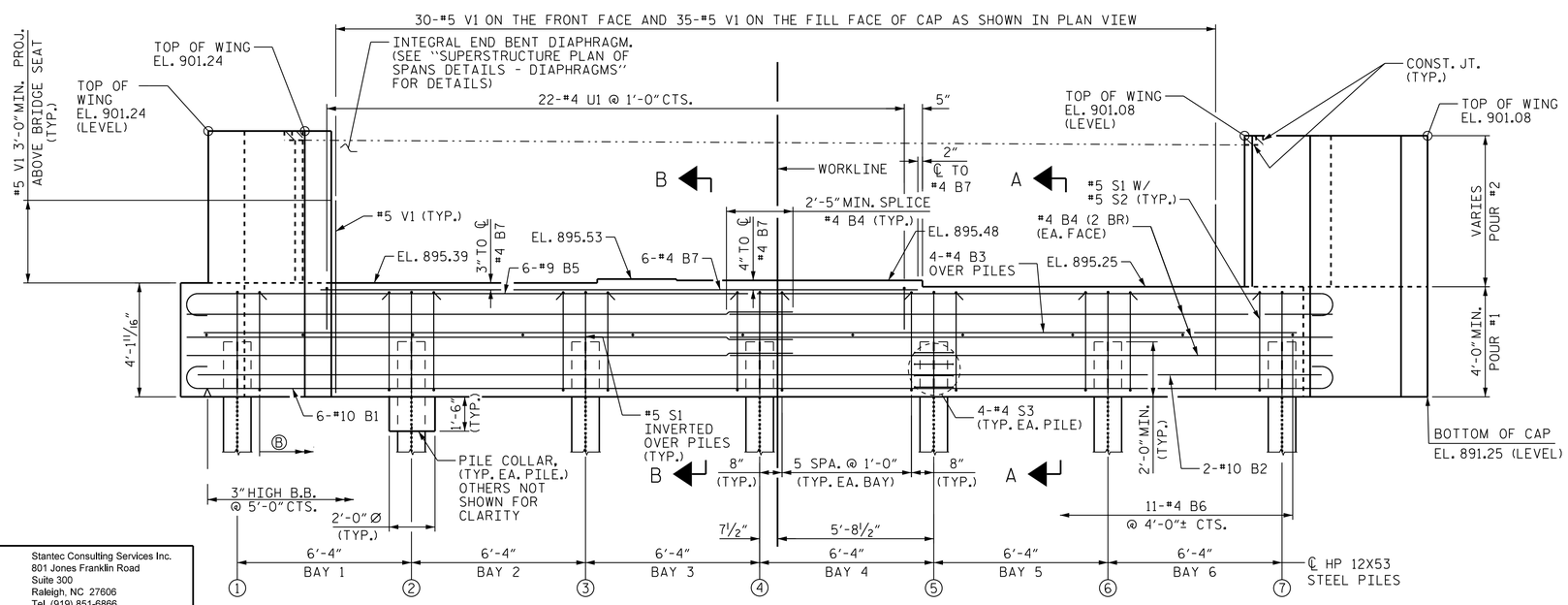

ELEVATION

NOTES

FOR WING WALL DETAILS, SEE "END BENT 1, DETAILS - WING WALLS" SHT. 2 OF 3.

(2 BR) DENOTES 2 BAR RUN.

CHAMFERS ARE NOT REQUIRED EXCEPT AS NOTED.

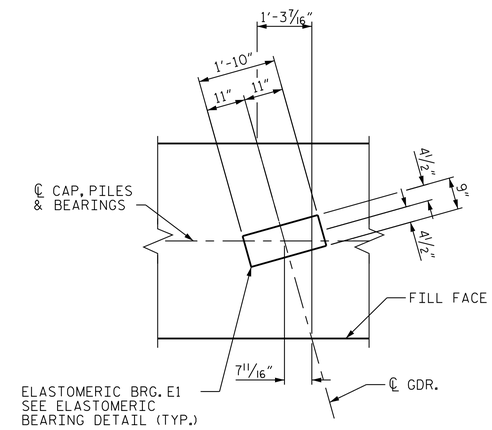

DETAIL A

DIMENSIONS TYPICAL FOR EACH BEARING

Ⓐ SLOPED CAP SURFACE BEYOND LIMIT OF INTEGRAL DIAPH. SEE END BENT 1 WING WALL DETAILS, SHT. 2 OF 3.

Ⓑ 43-#5 S1 & 36-#5 S2 SPA. AS SHOWN.

PROJECT NO. R-2707D

CLEVELAND COUNTY

STATION: 19+82.46 -Y1-

SHEET 1 OF 3

STATE OF NORTH CAROLINA
DEPARTMENT OF TRANSPORTATION
RALEIGH

SUBSTRUCTURE

END BENT 1

NORTH CAROLINA PROFESSIONAL SEAL 13406 ENGINEER JOSEPH T. KELVINGTON

DocuSigned by: Joseph T. Kelvington
4/27/2023

DOCUMENT NOT CONSIDERED FINAL UNLESS ALL SIGNATURES COMPLETED

REVISIONS						SHEET NO.
NO.	BY:	DATE:	NO.	BY:	DATE:	S1-22
1			3			TOTAL SHEETS
2			4			32

Stantec
Stantec Consulting Services Inc.
801 Jones Franklin Road
Suite 300
Raleigh, NC 27606
Tel. (919) 851-6866
Fax. (919) 851-7024
www.stantec.com
License No. F-0672

DRAWN BY: J. B. GEILE DATE: 02/02/18
CHECKED BY: N. D'AIUTO DATE: 02/12/18
DESIGN ENGINEER OF RECORD: J. KELVINGTON DATE: 04/27/23

4/27/2023 10:25:23 AM JHagenbush
c:\pw_working\dms55345\R2707D_SMU_E01_220488.dgn