DocuSign Envelope ID: A255E605-24D7-4CFB-B5B8-92120EC542FC

METAL POLE No. 1 AND No. 3

PROJECT REFERENCE NO.	SHEET NO.
R-5725	Sig-6.3

Design Loading for METAL POLE NO. 1

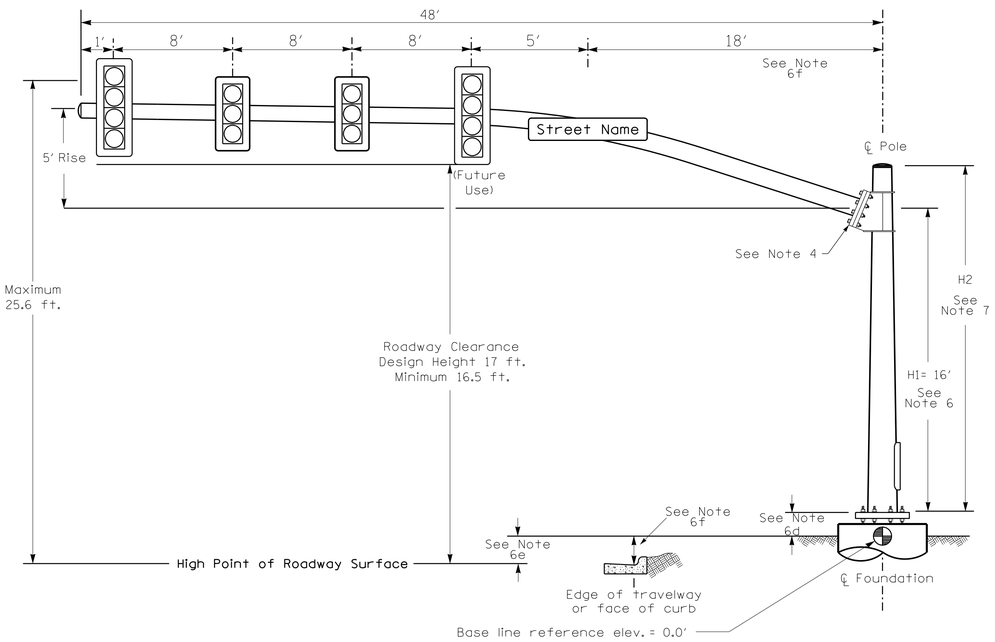

Elevation View @ 270°

Design Loading for METAL POLE NO. 3

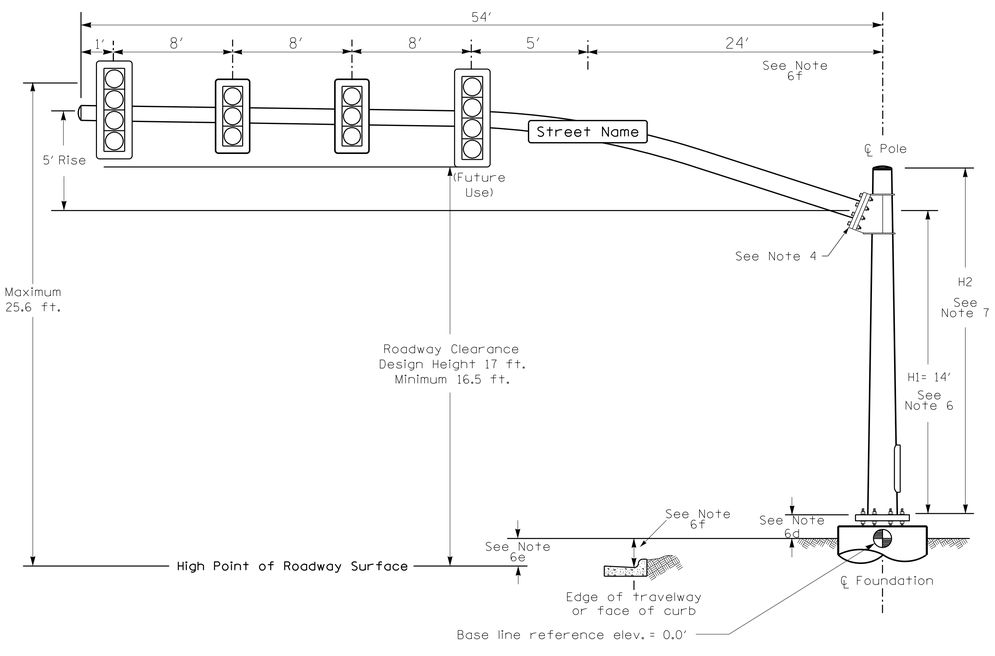

Elevation View @ 270°

SPECIAL NOTE

The contractor is responsible for verifying that the mast arm attachment height (H1) will provide the "Design Height" clearance from the roadway before submitting final shop drawings for approval. Verify elevation data below which was obtained by field measurement or from available project survey data.

Elevation Data for Mast Arm Attachment (H1)

Elevation Differences for:	Pole 1	Pole 3
Baseline reference point at ℄ Foundation @ ground level	938.0 ft.	940.0 ft.
Elevation difference at High point of roadway surface	+2.0 ft.	0.0 ft.
Elevation difference at Edge of travelway or face of curb	+1.0 ft.	0.0 ft.

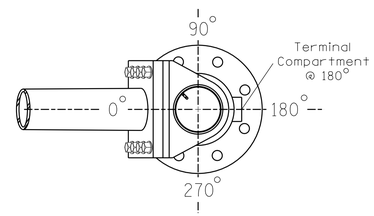

POLE RADIAL ORIENTATION

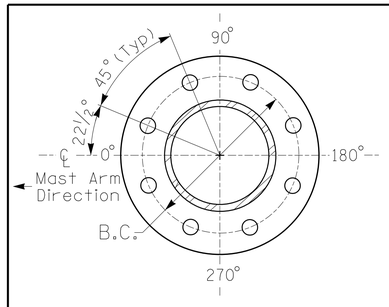

8 BOLT BASE PLATE DETAIL

See Note 6

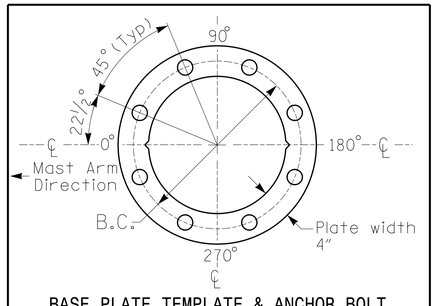

BASE PLATE TEMPLATE & ANCHOR BOLT LOCK PLATE DETAIL

For 8 Bolt Base Plate

MAST ARM LOADING SCHEDULE

LOADING SYMBOL	DESCRIPTION	AREA	SIZE	WEIGHT
	RIGID MOUNTED SIGNAL HEAD 12″-3 SECTION-WITH BACKPLATE	9.3 S.F.	25.5″W X 52.5″L	60 LBS
	RIGID MOUNTED SIGNAL HEAD 12″-4 SECTION-WITH BACKPLATE	11.5 S.F.	25.5″W X 66.0″L	74 LBS
Street Name	STREET NAME SIGN RIGID MOUNTED	12.0 S.F.	18.0″W X 96.0″L	27 LBS

NOTES

DESIGN REFERENCE MATERIAL

1. Design the traffic signal structure and foundation in accordance with:
   - The 6th Edition 2013 AASHTO "Standard Specifications for Structural Supports for Highway Signs, Luminaires, and Traffic Signals, including all of the latest interim revisions.
   - The 2018 NCDOT "Standard Specifications for Roads and Structures." The latest addenda to the specifications can be found in the traffic signal project special provisions.
   - The 2018 NCDOT Roadway Standard Drawings.
   - The traffic signal project plans and special provisions.
   - The NCDOT "Metal Pole Standards" located at the following NCDOT website: https://connect.ncdot.gov/resources/safety/Pages/ITS-Design-Resources.aspx

DESIGN REQUIREMENTS

2. Design the traffic signal structure using the loading conditions shown in the elevation views. These are anticipated worst case "design loads" and may not represent the actual loads that will be applied at the time of the installation. The contractor should refer to the traffic signal plans for the actual loads that will be applied at the time of the installation.
3. Design all signal supports using stress ratios that do not exceed 0.9.
4. A clamp-type bolted mast arm-to-pole connection may be used instead of the welded ring stiffened box connection shown as long as the connection meets all of the design requirements.
5. Design base plate with 8 anchor bolt holes. Provide 2 inch x 60 inch anchor bolts.
6. The mast arm attachment height (H1) shown is based on the following design assumptions:
   a. Nominal vertical rise in mast arm is 5 feet as measured from the centerline of the arm base to the centerline of the free end of the arm.
   b. Signal heads are rigidly mounted and vertically centered on the mast arm.
   c. The roadway clearance height for design is as shown in the elevation views.
   d. The top of the pole base plate is 0.75 feet above the ground elevation.
   e. Refer to the Elevation Data Chart for the elevation differences between the proposed foundation ground level and the high point of the roadway.
   f. Provide horizontal distance from the proposed centerline of the foundation to the edge of travelway. Refer to the Elevation Data Chart for elevation difference between the proposed foundation ground level and the edge of travelway. This information is necessary to ensure that the roadway clearance is maintained at the edge of the travelway and to aid in the camber design of the arm.
7. The pole manufacturer will determine the total height (H2) of each pole using the greater of the following:
   - Mast arm attachment height (H1) plus 2 feet, or
   - H1 plus 1/2 of the total height of the mast arm attachment assembly plus 1 foot.
8. If pole location adjustments are required, the contractor must gain approval from the Engineer as this may affect the mast arm lengths and arm attachment heights. The contractor may contact the Signal Design Section Senior Structural Engineer for assistance at (919) 814-5000.
9. The contractor is responsible for verifying that the mast arm length shown will allow proper positioning of the signal heads over the roadway.
10. The contractor is responsible for providing soil penetration testing data (SPT) to the pole manufacturer so site specific foundations can be designed.

All metal poles and arms should be Black Powder Coated in color as specified in the project special provisions.

Infrastructure Consulting Services, Inc.
RKA
RAMEY KEMP ASSOCIATES
5808 Faringdon Place
Raleigh, North Carolina 27609
Phone: 919-872-5115
NC License No. F-1489
www.rameykemp.com

NCDOT Wind Zone 4 (90 mph)

DOCUMENT NOT CONSIDERED FINAL UNLESS ALL SIGNATURES COMPLETED

Prepared for: Transportation Mobility and Safety Division, Signal Design Section, Department of Transportation, State of North Carolina
750 N.Greenfield Pkwy,Garner,NC 27529

SCALE 0 N/A — N/A

NC 68
at
NC 150 (Oak Ridge Road)

Division 7 Guilford County Oak Ridge

PLAN DATE:	April 2023	REVIEWED BY:	TS Popelka
PREPARED BY:	JA Wendt	RKA PROJ. NO.:	18062 (040)

REVISIONS	INIT.	DATE

SEAL
NORTH CAROLINA PROFESSIONAL SEAL 051573 ENGINEER TIMOTHY S. POPELKA

DocuSigned by: Timothy Popelka
PROFESSIONAL ENGINEER SIGNATURE — DATE 04/05/2023

SIG. INVENTORY NO. 07-0883T5

$$$$$SYSTIME$$$$
$$$$$$$$$$$$$$$$$$$$$$$$$$$$