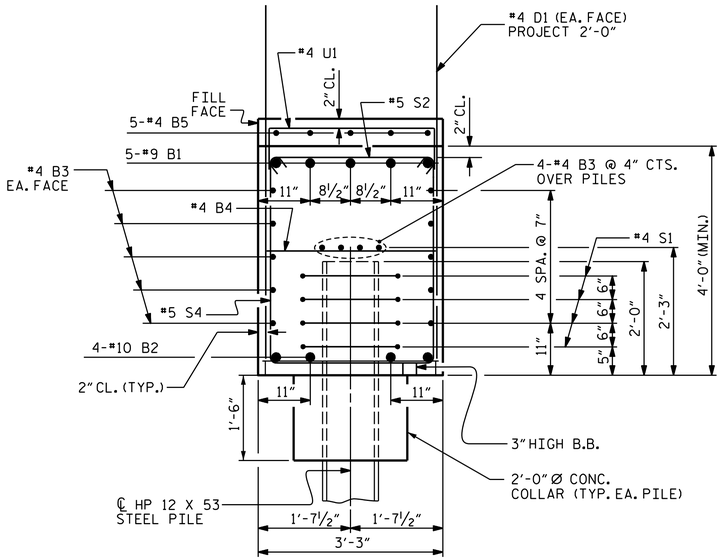

SECTION A-A

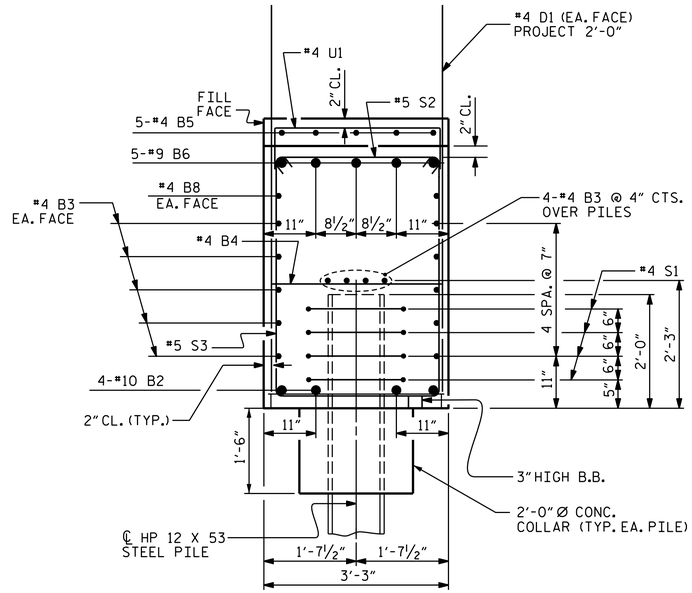

SECTION B-B

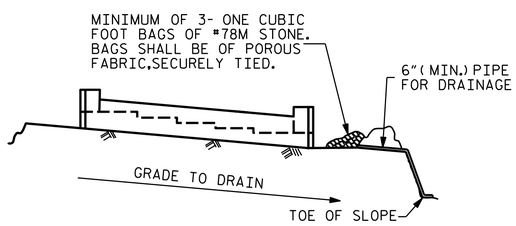

BAGGED STONE AND PIPE SHALL BE PLACED IMMEDIATELY AFTER COMPLETION OF END BENT EXCAVATION. PIPE MAY BE EITHER CONCRETE, CORRUGATED STEEL, CORRUGATED ALUMINUM ALLOY, OR CORRUGATED PLASTIC. PERFORATED PIPE WILL NOT BE ALLOWED.

BAGGED STONE SHALL REMAIN IN PLACE UNTIL THE ENGINEER DIRECTS THAT IT BE REMOVED. THE CONTRACTOR SHALL REMOVE AND DISPOSE OF SILT ACCUMULATIONS AT BAGGED STONE WHEN SO DIRECTED BY THE ENGINEER. BAGS SHALL BE REMOVED AND REPLACED WHENEVER THE ENGINEER DETERMINES THAT THEY HAVE DETERIORATED AND LOST THEIR EFFECTIVENESS.

NO SEPARATE PAYMENT WILL BE MADE FOR THIS WORK AND THE ENTIRE COST OF THIS WORK SHALL BE INCLUDED IN THE UNIT CONTRACT PRICE BID FOR THE SEVERAL PAY ITEMS.

TEMPORARY DRAINAGE AT END BENT

BAR TYPES

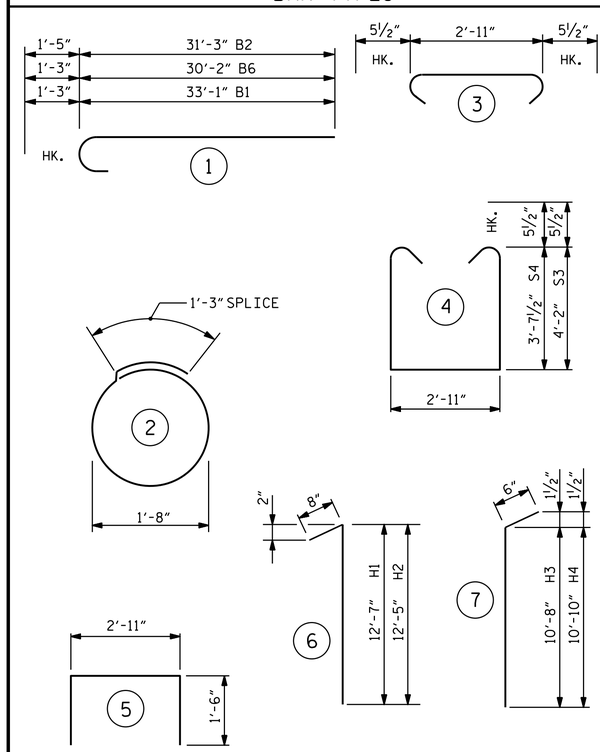

ALL BAR DIMENSIONS ARE OUT TO OUT.

BILL OF MATERIAL

END BENT 2

BAR	NO.	SIZE	TYPE	LENGTH	WEIGHT
B1	5	9	1	34'-4"	584
B2	8	10	1	32'-8"	1125
B3	28	4	STR.	30'-2"	564
B4	16	4	STR.	2'-11"	31
B5	10	4	STR.	12'-0"	80
B6	5	9	1	31'-5"	534
B7	5	4	STR.	7'-10"	26
B8	2	4	STR.	27'-3"	36
D1	80	4	STR.	5'-10"	312
H1	22	6	6	13'-3"	438
H2	22	6	6	13'-1"	432
H3	14	5	7	11'-2"	163
H4	14	5	7	11'-4"	165
K1	24	4	STR.	2'-9"	44
S1	36	4	2	6'-6"	156
S2	48	5	3	3'-10"	192
S3	24	5	4	12'-2"	305
S4	24	5	4	11'-1"	277
U1	22	4	5	5'-11"	87
V1	32	5	STR.	10'-10"	362
V2	28	4	STR.	9'-7"	179

REINFORCING STEEL, LBS.	6092
CLASS A CONCRETE, CY	
POUR 1 (CAP, LOWER PORTION OF WINGS AND COLLARS)	36.9
POUR 2 (UPPER PORTION OF WINGS)	6.3
TOTAL	43.2
HP 12X53 STEEL PILES NO.	9
L.F.	585
PILE DRIVING EQUIPMENT SETUP FOR HP 12X53 STEEL PILES, EA.	9
PILE REDRIVES, EA.	5

PROJECT NO. R-2561CA

COLUMBUS COUNTY

STATION: 71+06.00 -L-

SHEET 3 OF 3

STATE OF NORTH CAROLINA
DEPARTMENT OF TRANSPORTATION
RALEIGH

SUBSTRUCTURE END BENT 2

RIGHT LANE

DESIGN ENGINEER OF RECORD: DocuSigned by: DATE : 8/15/2022
DB3C8E45B06D499...

DRAWN BY : A. K. ALLANKI DATE : 08/19/20
CHECKED BY : R. C. LARSON DATE : 08/20/20

DocuSigned by:
DB3C8E45B06D499...
8/15/2022

NORTH CAROLINA PROFESSIONAL SEAL 14114 ENGINEER ROBERT C. LARSON

DOCUMENT NOT CONSIDERED FINAL UNLESS ALL SIGNATURES COMPLETED

ENGINEERS • PLANNERS • SCIENTISTS • CONSTRUCTION MANAGERS LICENSE NUMBER: C-0764
KCI Associates of North Carolina, P.A.
4505 Falls of Neuse Road, Suite 400, Raleigh, NC 27609-5270 Phone (919) 783-9214

REVISIONS									SHEET NO.
NO.	BY:	DATE:	NO.	BY:	DATE:				S4- 25
1			3						TOTAL SHEETS
2			4						29

$FILE$ $TIME$ $USER$ $PENTBLS$ $PLTDRVS$
$DATE$ KCI PROJECT NO. 241704391.04