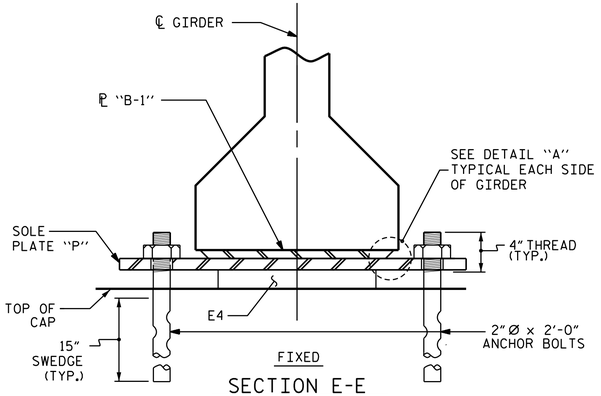

SECTION E-E

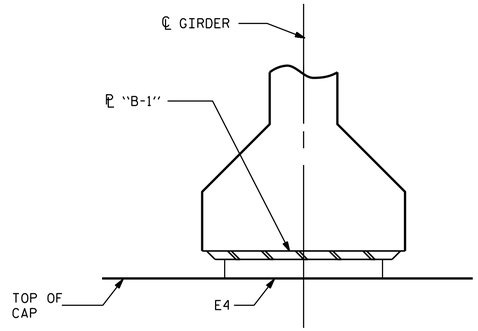

SECTION F-F

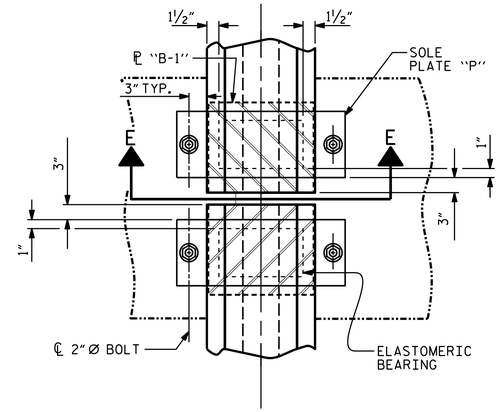

TYPICAL PLAN

(SHOWING CONTINUOUS BENT)

NOTES

AT ALL FIXED POINTS OF SUPPORT, NUTS FOR ANCHOR BOLTS ARE TO BE TIGHTENED FINGER TIGHT AND THEN BACKED OFF ½ TURN. THE THREAD OF THE NUT AND BOLT SHALL THEN BE BURRED WITH A SHARP POINTED TOOL.

STEEL SOLE PLATES, ANCHOR BOLTS, NUTS, AND WASHERS SHALL BE GALVANIZED IN ACCORDANCE WITH THE STANDARD SPECIFICATIONS.

PRIOR TO WELDING, GRIND THE GALVANIZED SURFACE OF THE PORTION OF THE EMBEDDED PLATE AND SOLE PLATE THAT ARE TO BE WELDED. AFTER WELDING, DAMAGED GALVANIZED SURFACES SHALL BE REPAIRED IN ACCORDANCE WITH THE STANDARD SPECIFICATIONS.

WHEN WELDING THE SOLE PLATE TO THE EMBEDDED PLATE IN THE GIRDER, USE TEMPERATURE INDICATING WAX PENS, OR OTHER SUITABLE MEANS, TO ENSURE THAT THE TEMPERATURE OF THE SOLE PLATE DOES NOT EXCEED 300°F. TEMPERATURES ABOVE THIS MAY DAMAGE THE ELASTOMER.

SOLE PLATE "P", BOLTS, NUTS, AND WASHERS SHALL BE INCLUDED IN THE PAY ITEM FOR PRESTRESSED CONCRETE GIRDERS.

ANCHOR BOLTS SHALL MEET THE REQUIREMENTS OF ASTM A449. NUTS SHALL MEET THE REQUIREMENTS OF AASHTO M291-DH OR AASHTO M292-2H. WASHERS SHALL MEET THE REQUIREMENTS OF AASHTO M293. NO SHOP DRAWINGS ARE REQUIRED FOR ANCHOR BOLTS, NUTS AND WASHERS. SHOP INSPECTION IS REQUIRED.

ALL SURFACES OF BEARING PLATES SHALL BE SMOOTH AND STRAIGHT.

THE ELASTOMER IN THE STEEL REINFORCED BEARINGS SHALL HAVE A SHEAR MODULUS OF 0.160 KSI, IN ACCORDANCE WITH AASHTO M251.

FOR STEEL REINFORCED ELASTOMERIC BEARINGS, SEE SPECIAL PROVISIONS.

ALL SOLE PLATES SHALL BE AASHTO M270 GRADE 36.

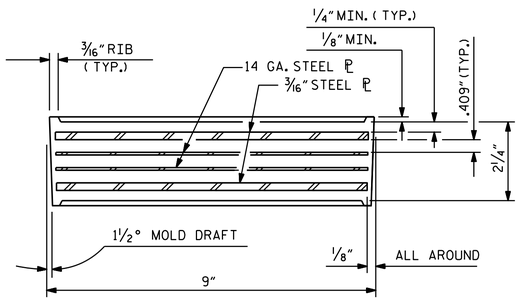

TYPICAL SECTION OF ELASTOMERIC BEARINGS

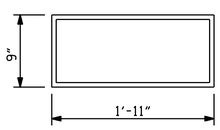

E4 (24 REQ'D)

PLAN VIEW OF ELASTOMERIC BEARING

TYPE V

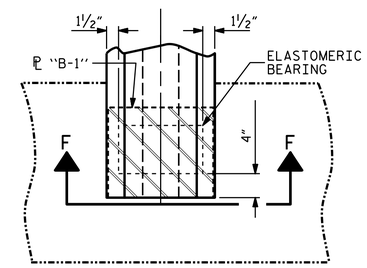

TYPICAL PLAN

(SHOWING INTEGRAL END BENT)

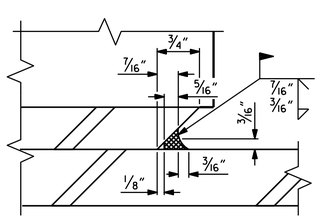

DETAIL "A"

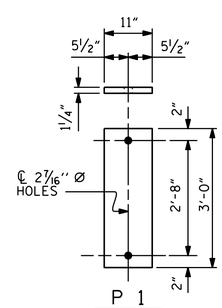

P 1

(FIXED)

P1 (16 REQ'D)

SOLE PLATE DETAILS ("P")

MAXIMUM ALLOWABLE SERVICE LOADS	
D.L.+L.L. (NO IMPACT)	
TYPE V	365 k

PROJECT NO. R-2561CA

COLUMBUS COUNTY

STATION: 70+34.00 -L-

STATE OF NORTH CAROLINA
DEPARTMENT OF TRANSPORTATION
RALEIGH

STANDARD
ELASTOMERIC BEARING
PRESTRESSED CONCRETE GIRDER SUPERSTRUCTURE
LEFT LANE

DocuSigned by: DB3C8E45B06D4... 8/15/2022

NORTH CAROLINA PROFESSIONAL SEAL 14114 ENGINEER ROBERT C. LARSON

DESIGN ENGINEER OF RECORD:	DATE 8/15/2022
ASSEMBLED BY : A. K. ALLANKI	DATE : 08/23/19
CHECKED BY : R. C. LARSON	DATE : 06/22/20

DRAWN BY : EEM 2/97	REV. 6/13	AAC/MAA
CHECKED BY : VAP 2/97	REV. 1/15	MAA/TMG
	REV. 12/17	MAA/THC

DOCUMENT NOT CONSIDERED FINAL UNLESS ALL SIGNATURES COMPLETED

ENGINEERS ◆ PLANNERS ◆ SCIENTISTS ◆ CONSTRUCTION MANAGERS LICENSE NUMBER: C-0784
KCI Associates of North Carolina, P.A.
4505 Falls of Neuse Road, Suite 400 Raleigh, NC 27609-6270 Phone (919) 783-9241

REVISIONS							SHEET NO.
NO.	BY:	DATE:	NO.	BY:	DATE:		S3-15
1			3				TOTAL SHEETS
2			4				30

STD. NO. EB4 (SHT 1)

$FILE$ $TIME$ $USER$ $PENTBLS$ $PLTDRVS$
$DATE$
KCI PROJECT NO. 241704391.04