DocuSign Envelope ID: BCA8A86B-BBE2-4E6A-A40F-8C1B47FC0980

PROJECT REFERENCE NO.	SHEET NO.
B-5869	2C-4

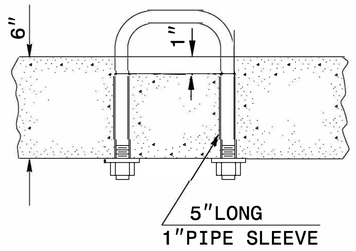

PARTIAL SECTION

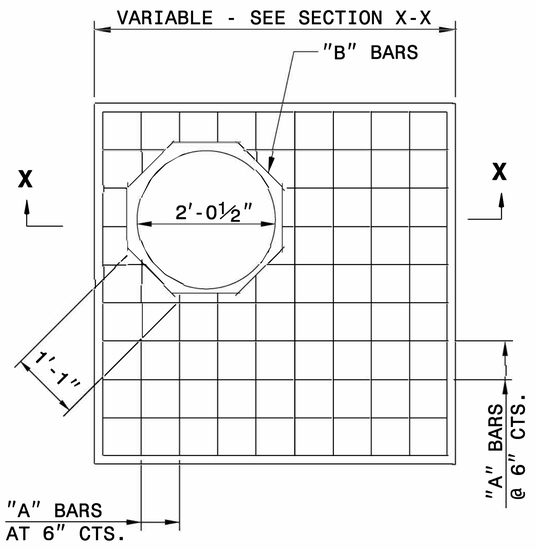

PLAN

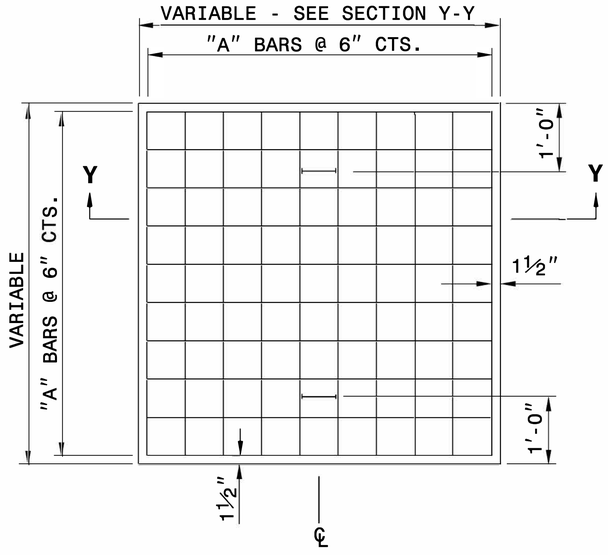

PLAN

GENERAL NOTES:

CONSTRUCT IN ACCORDANCE WITH SECTION 859 OF THE STANDARD SPECIFICATIONS.

THE DIMENSIONS FOR THE EXISTING BOXES ARE APPROXIMATE AND MAY VARY SLIGHTLY.

DETAIL INTENDED FOR NON-TRAFFIC BEARING DRAINAGE STRUCTURES.

BILL OF MATERIALS

REINFORCING STEEL				
CODE	SIZE	QTY.	LENGTH	REINF. STEEL LBS.
A	#4	20	4'-6"	60.12
B	#4	8	1'-1"	5.79
TOTAL				65.91 *
MASONRY				CU YDS
TOP SLAB CONCRETE CLASS "B"				.4326 *
BRICK MASONRY PER FT HT (MIN)				.4111

* NOTE:
QUANTITIES BASED ON 3'-6" X 3'-6" DRAINAGE STRUCTURE. ADJUST QUANTITIES FOR LARGER STRUCTURES AND MANHOLE CONSTRUCTION.

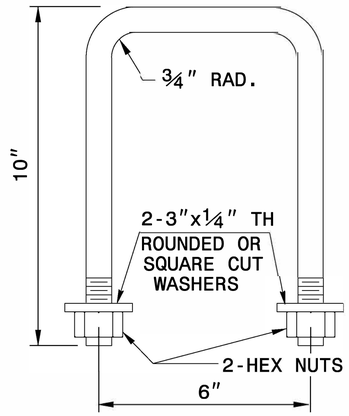

DETAIL OF HANDLE

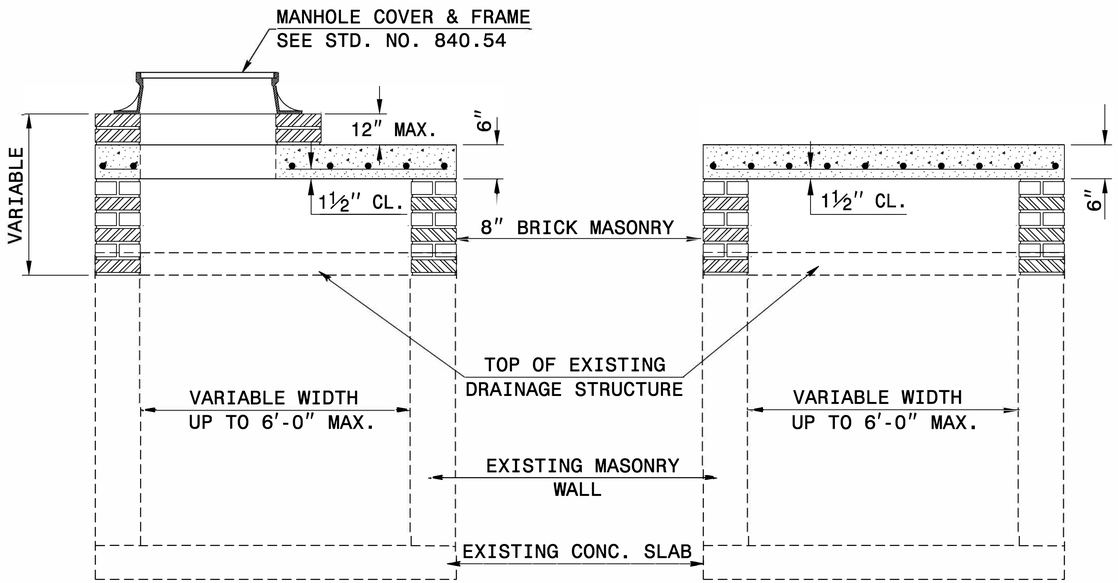

SECTION X-X

SECTION Y-Y

DOCUMENT NOT CONSIDERED FINAL UNLESS ALL SIGNATURES COMPLETED

NORTH CAROLINA PROFESSIONAL SEAL 33144 ENGINEER
Digitally signed by: Nicholas Hackler
2/27/2023

CONTRACT STANDARDS AND DEVELOPMENT UNIT
Office 919-707-6950 FAX 919-250-4119

DETAIL TO CONVERT EXISTING DI, CB, OTCB or GI TO JUNCTION BOX (MANHOLE OPTIONAL)

ORIGINAL BY: T.S.S. DATE: NOV.1997
MODIFIED BY: T.S.S. DATE: FEB.2000
CHECKED BY: DATE:
FILE SPEC.: ds174:/usr/details/stand/boxtojbe.dgn