SCOPE OF WORK

DEMOLISH EXISTING BRIDGE DECK JOINT.

RECONSTRUCT BRIDGE DECK JOINTS AND INSTALL NEW JOINT SEALS.

SHOTBLAST EXISTING CONCRETE DECK.

APPLY SILANE DECK TREATMENT.

NOTES

GENERAL DRAWING INFORMATION IS TAKEN FROM THE ORIGINAL PLANS AND THE ROUTINE INSPECTION REPORT DATED 06/26/2018.

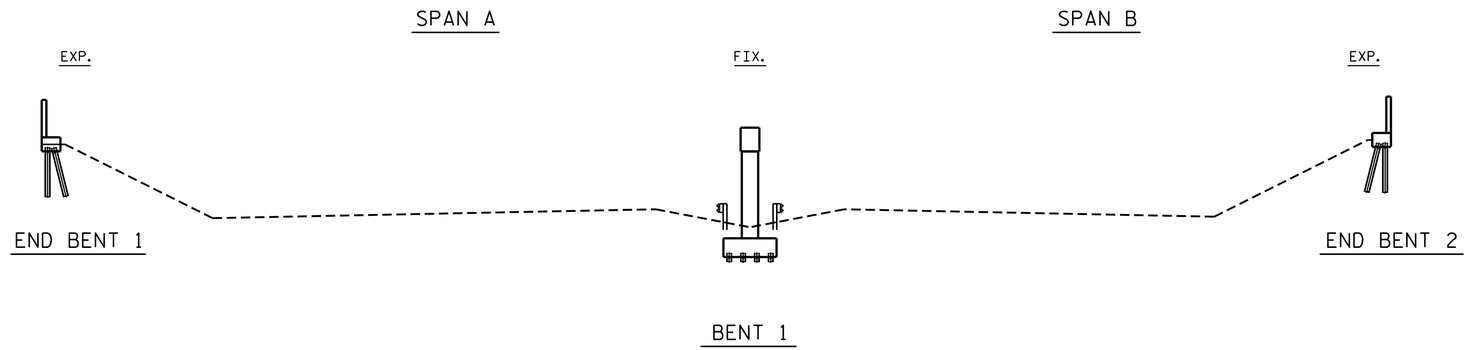

ELEVATION

(SECTION ALONG ℄ ROADWAY)

I hereby certify that this structure was rehabilitated according to these plans or as noted therein.

Resident Engineer Date

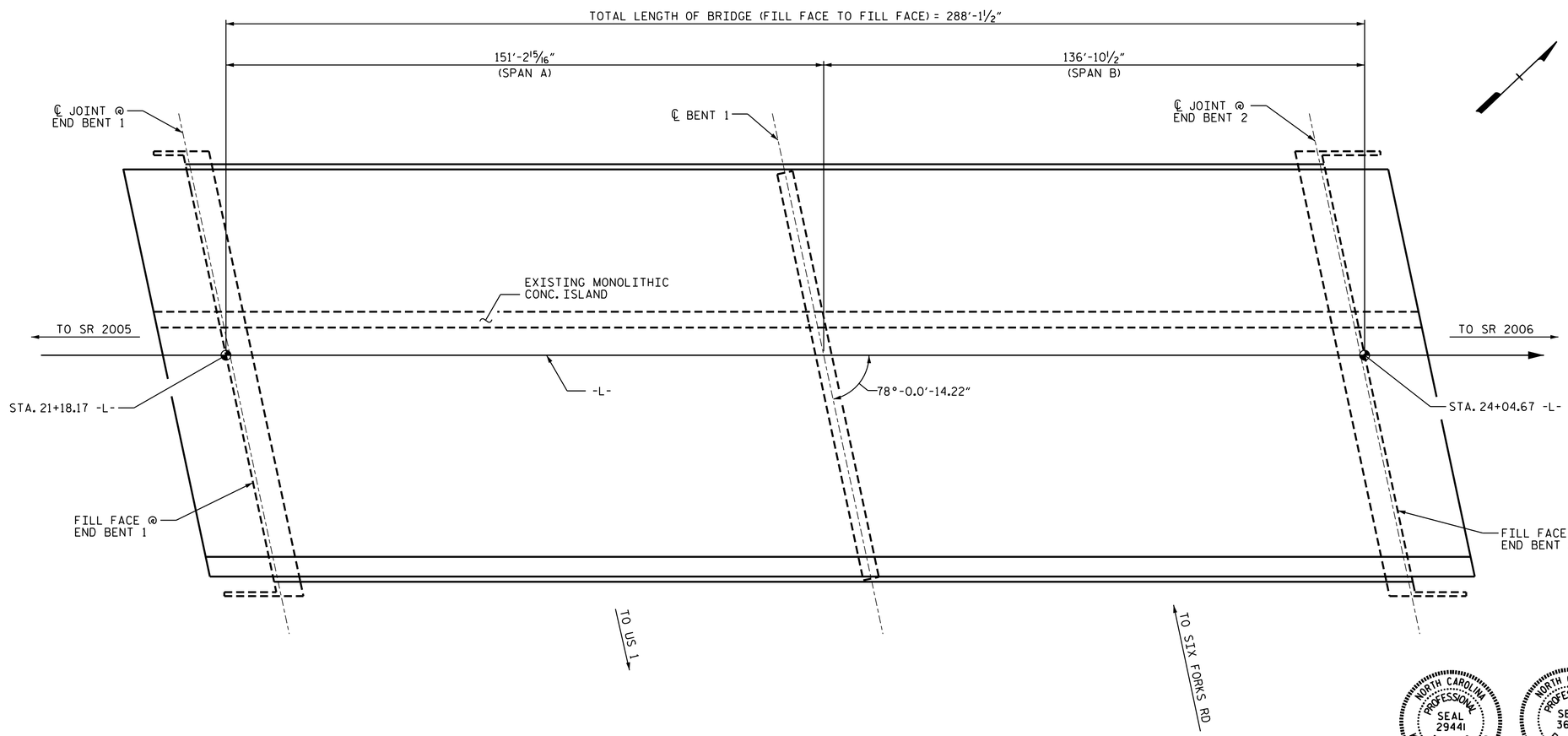

PLAN

(COLUMNS & FOOTINGS NOT SHOWN IN PLAN VIEW FOR CLARITY)

PROJECT NO. U-5826

WAKE COUNTY

BRIDGE NO. 910775

SHEET 1 OF 2

NORTH CAROLINA PROFESSIONAL SEAL 29441 ENGINEER KRISTY W. ALFORD

DocuSigned by: F2458389308F40E... 11/4/2019

NORTH CAROLINA PROFESSIONAL SEAL 36871 ENGINEER FRANCESCA LEA

DocuSigned by: Francesca Lea B79DADB65D584EF... 11/4/2019

DOCUMENT NOT CONSIDERED FINAL UNLESS ALL SIGNATURES COMPLETED

STATE OF NORTH CAROLINA
DEPARTMENT OF TRANSPORTATION
RALEIGH

GENERAL DRAWING

FOR BRIDGE ON SR 2000 (FALLS OF NEUSE RD) OVER I-540 BETWEEN SR 2005 AND SR 2006

REVISIONS						SHEET NO.
NO.	BY:	DATE:	NO.	BY:	DATE:	S-1
1			3			TOTAL SHEETS
2			4			6

DRAWN BY : S. T. SANDOR/ M. WELDON DATE : 06/2019

CHECKED BY : W. D. REAMS DATE : 09/2019

04-NOV-2019 10:29
X:\Division05\U5826\Structures\Plans\Final Plans\401_001_U5826_ GD1_S01_910775.DGN
flea