DocuSign Envelope ID: F3D3EAE2-9AC4-4F0C-A9BF-CCF8A1F65258

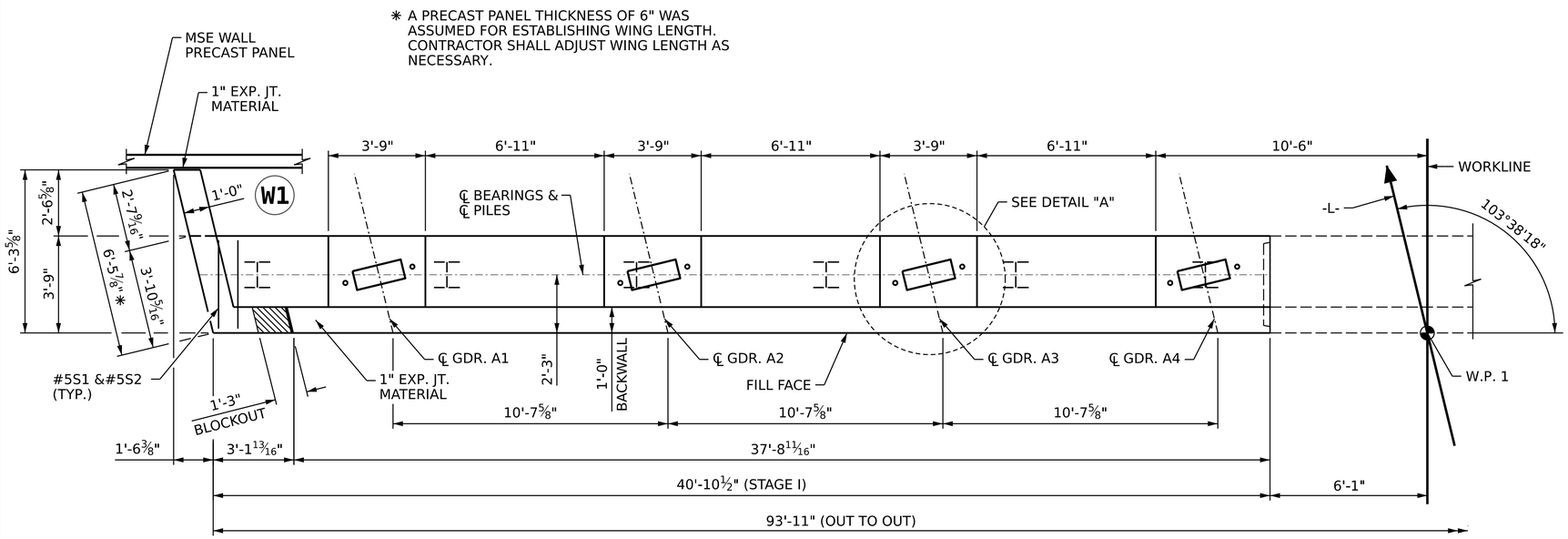

PLAN

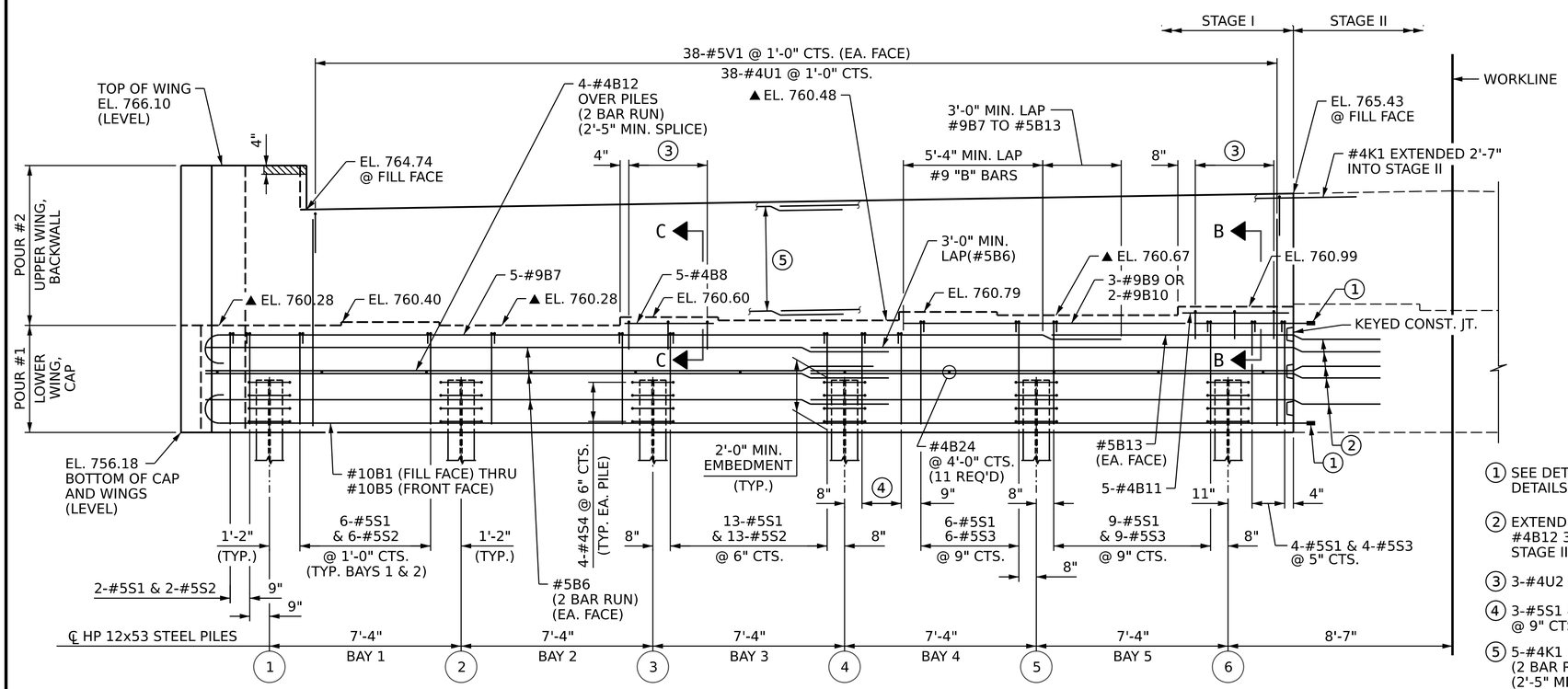

ELEVATION

▲ FOR LOCATION OF ELEVATIONS BETWEEN BRIDGE SEAT BUILDUPS, SEE SECTION A-A ON SHEET 5.

NOTES:

MECHANICAL COUPLERS SHALL BE USED TO JOIN THE #9 "B" OR #10 "B" BARS IN STAGE I WITH THE #9 "B" OR #10 "B" BARS, RESPECTIVELY, IN STAGE II. THE LOCATION OF THE COUPLERS SHALL BE STAGGERED ON ALTERNATING BARS BY 2'-0" AND THE STAGE I BARS SHALL BE CUT ACCORDINGLY TO ALLOW A MINIMUM OF 1'-0" AND A MAXIMUM OF 3'-0" EXTENSION INTO STAGE II CONSTRUCTION.

FOR MECHANICAL COUPLERS, SEE MECHANICAL BUTT SPLICES FOR REINFORCING STEEL IN STANDARD SPECIFICATIONS.

THE CONTRACTOR'S ATTENTION IS CALLED TO THE FACT THAT THE LENGTHS OF THE #9 OR #10 "B" BARS AT THE STAGED CONSTRUCTION JOINT MAY NEED TO BE ADJUSTED DUE TO THE TYPE OF MECHANICAL BUTT SPLICE CHOSEN BY THE CONTRACTOR. NO ADDITIONAL PAYMENT WILL BE MADE FOR ANY ADJUSTMENTS.

STIRRUPS AND "U" BARS IN CAP MAY BE SHIFTED AS NECESSARY TO CLEAR ANCHORS.

#5 "V" BARS IN BACKWALL SHALL BE PLACED 2" CLEAR FROM TOP OF BACKWALL.

BACKWALL SHALL BE PLACED BEFORE APPLYING THE EPOXY PROTECTIVE COATING.

THE TOP SURFACE OF THE END BENT CAP EXCEPT THE BRIDGE SEAT BUILDUPS SHALL BE SLOPED TRANSVERSELY FROM THE FILL FACE TO THE FRONT FACE AT THE RATE OF 2%.

THE TOP SURFACE AREAS OF THE END BENT CAPS SHALL BE CURED IN ACCORDANCE WITH THE STANDARD, EXCEPT THE MEMBRANE CURING COMPOUND METHOD SHALL NOT BE USED.

THE CONCRETE IN THE SHADED AREA OF THE WING SHALL BE POURED AFTER THE JOINT BETWEEN THE DECK AND THE APPROACH SLAB HAS BEEN SAWED AND THE BARRIER RAIL IS CAST IF SLIP FORMING IS USED.

FOR WING DETAILS, SEE SHEET 3 OF 5.

FOR DETAIL "B", PILE SPLICE DETAILS, AND TEMPORARY DRAINAGE DETAILS, SEE SHEET 4 OF 5.

FOR CONSTRUCTION JOINT DETAILS, SEE "KEYED CONSTRUCTION JOINT DETAIL" ON SHEET 4 OF 5.

FOR SECTIONS B-B AND C-C, SEE SHEET 5 OF 5.

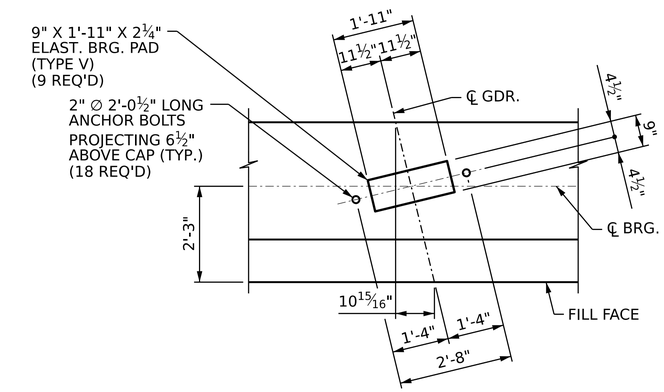

DETAIL "A"

1. SEE DETAIL "B" FOR REINF. DETAILS AT CONST. JT.
2. EXTEND #5B6, #5B13, #4B12 3'-2" MIN. INTO STAGE II
3. 3-#4U2 @ 1'-6" CTS.
4. 3-#5S1 & 3-#5S2 @ 9" CTS.
5. 5-#4K1 @ 1'-0" CTS. (2 BAR RUN) (2'-5" MIN. LAP) (EA. FACE)

PROJECT NO. BR-0043
ROCKINGHAM COUNTY
STATION: POT 25+80.88 -L-

SHEET 1 OF 5

AECOM
AECOM TECHNICAL SERVICES OF NC, INC.
5438 WADE PARK BOULEVARD, SUITE 200
RALEIGH, NC 27607
(919) 854-6200 www.aecom.com
AECOM License No. F-0342

NORTH CAROLINA PROFESSIONAL SEAL 030474 ENGINEER JOHN C. MORRISON

DocuSigned by: John C. Morrison 1/31/2023
A2FDE142C82F4AB...

STATE OF NORTH CAROLINA
DEPARTMENT OF TRANSPORTATION
RALEIGH

SUBSTRUCTURE

END BENT 1

STAGE I

REVISIONS							SHEET NO.
NO.	BY:	DATE:	NO.	BY:	DATE:		S-28
1			3				TOTAL SHEETS
2			4				45

DOCUMENT NOT CONSIDERED FINAL UNLESS ALL SIGNATURES COMPLETED

DRAWN BY :	D.R. DRUM	DATE :	11/2022
CHECKED BY :	D. RITACCO	DATE :	11/2022
DESIGN ENGINEER OF RECORD:	J.C. MORRISON	DATE :	12/2022

1/31/2023
c:\pwworking\aecom_ds21_na_2020\d0125534\401_055_BR-0043_SMU_E101_S1-28_780151.dgn
caterm