DocuSign Envelope ID: F3D3EAE2-9AC4-4F0C-A9BF-CCF8A1F65258

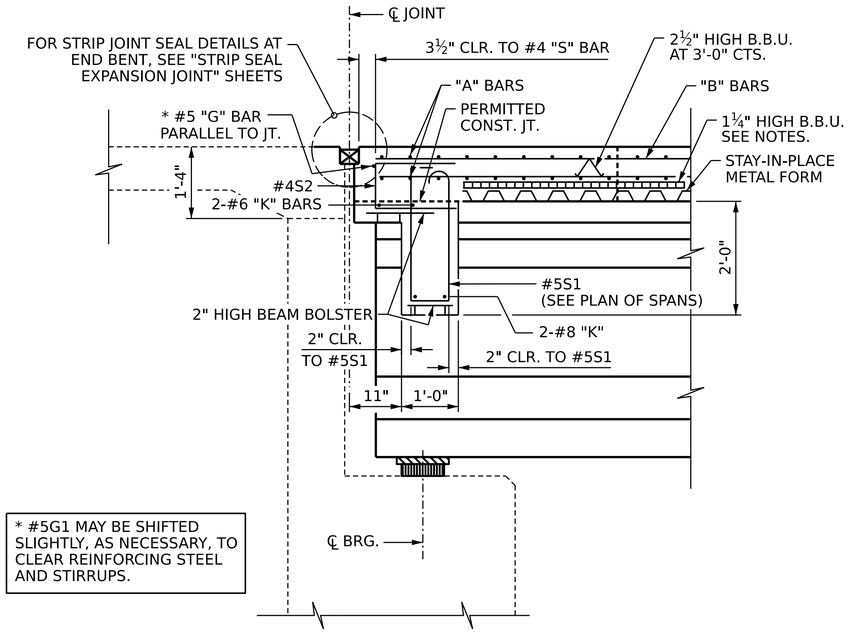

* #5G1 MAY BE SHIFTED SLIGHTLY, AS NECESSARY, TO CLEAR REINFORCING STEEL AND STIRRUPS.

SECTION THRU END BENT DIAPHRAGMS

(DIMENSIONS SHOWN ARE NORMAL TO END BENT)
(END BENT 1 SHOWN, END BENT 2 SIMILAR)

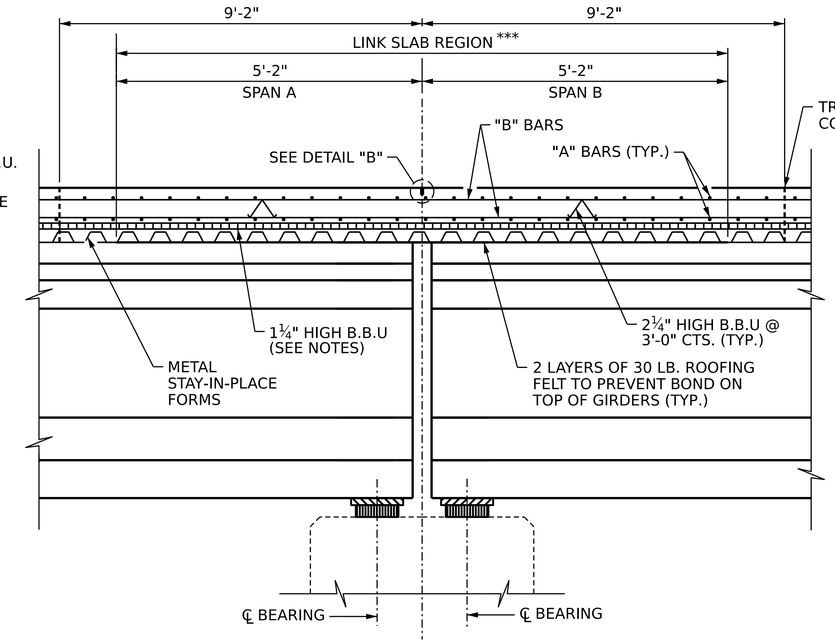

SECTION @ LINK SLAB

(DIMENSIONS MEASURED ALONG ℄ GIRDER)

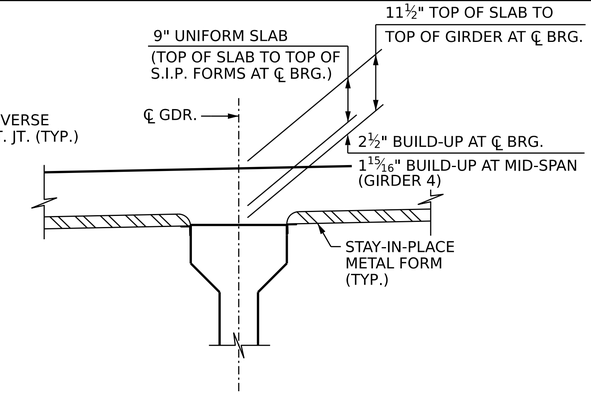

DETAIL "A"

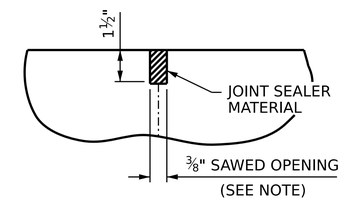

DETAIL "B"

A 1½" DEEP, ⅜" WIDE CONTRACTION JOINT AT BENT CONTROL LINE SHALL BE SAWN WITHIN 24 HOURS OF POURING THE DECK. THE JOINT SHALL BE FILLED WITH JOINT SEALER MATERIAL. THE JOINT SEALER MATERIAL SHALL CONFORM TO THE REQUIREMENTS OF SECTION 1028-3 OF THE STANDARD SPECIFICATIONS.

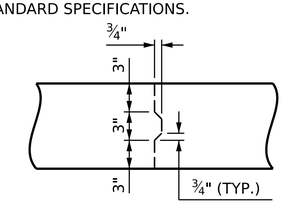

TRANSVERSE CONSTRUCTION JOINT IN DECK SLAB

NOTE: REINFORCING STEEL IN SLAB NOT SHOWN. REINFORCING STEEL SHALL BE CONTINUOUS THRU JOINT.

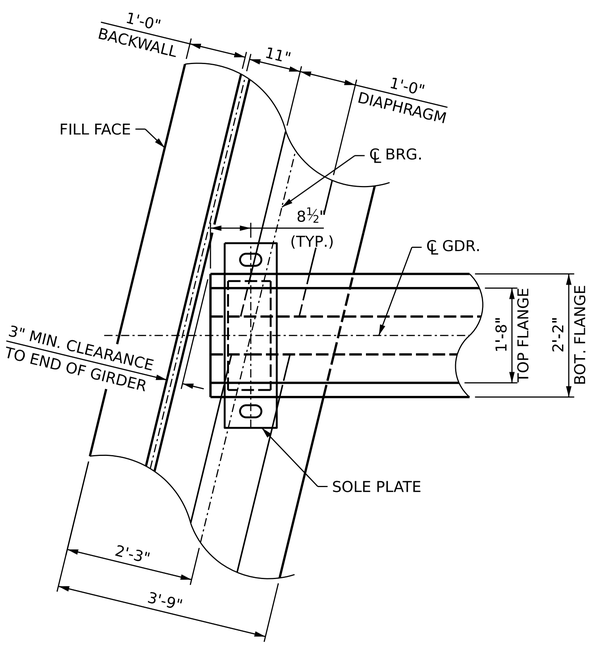

PLAN OF GIRDER AT END BENT DIAPHRAGM

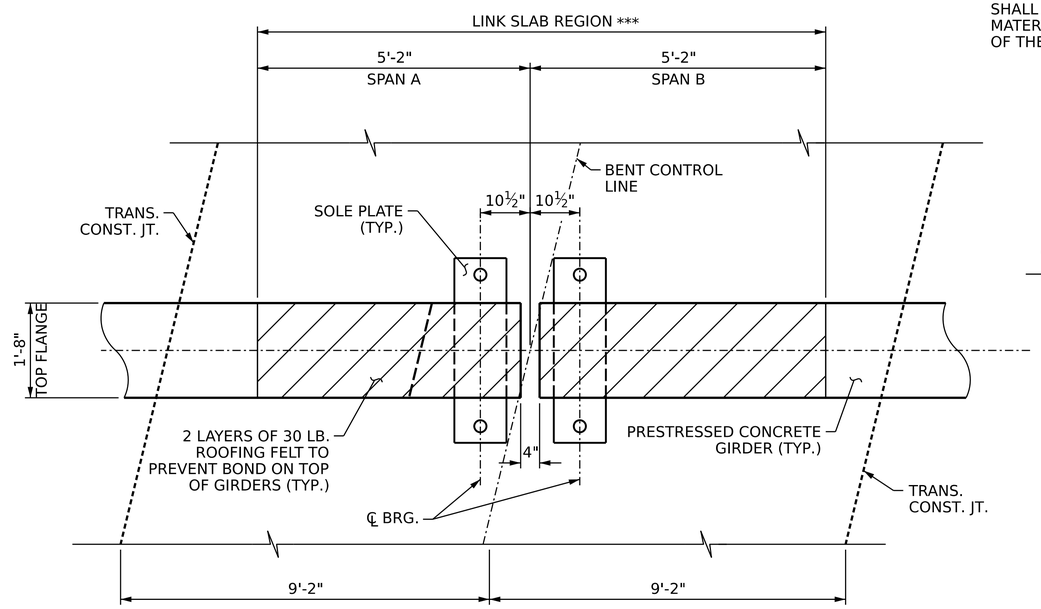

PLAN @ BENT

***: THE TOP OF GIRDER IN THE REGION OF THE LINK SLAB SHALL BE SMOOTH (NOT RAKED) AND FREE OF STIRRUPS, ANCHOR STUDS, DECK FORMWORK ATTACHMENTS, AND OVERHANG FALSEWORK/FORMWORK ATTACHMENTS.

METAL STAY-IN-PLACE FORMS SHALL NOT BE WELDED TO THE GIRDER FLANGES IN THE REGION OF THE LINK SLAB.

PROJECT NO. BR-0043
ROCKINGHAM COUNTY
STATION: POT 25+80.88 -L-

SHEET 3 OF 3

AECOM
AECOM TECHNICAL SERVICES OF NC, INC.
5438 WADE PARK BOULEVARD, SUITE 200
RALEIGH, NC 27607
(919) 854-6200 www.aecom.com
AECOM License No. F-0342

NORTH CAROLINA PROFESSIONAL SEAL 030474 ENGINEER JOHN C. MORRISON

DocuSigned by: John C. Morrison A2FDE142C82F4AB... 1/31/2023

STATE OF NORTH CAROLINA
DEPARTMENT OF TRANSPORTATION
RALEIGH
SUPERSTRUCTURE

TYPICAL SECTION DETAILS

REVISIONS									SHEET NO.
NO.	BY:	DATE:	NO.	BY:	DATE:				S-10
1			3						TOTAL SHEETS
2			4						45

DRAWN BY : B.T. LEROY DATE : 11/2022
CHECKED BY : J.C. MORRISON DATE : 11/2022
DESIGN ENGINEER OF RECORD: J.C. MORRISON DATE : 12/2022

DOCUMENT NOT CONSIDERED FINAL UNLESS ALL SIGNATURES COMPLETED

1/31/2023
c:\pwworking\aecom_ds21_na_2020\d0125534\401_019_BR-0043_SMU_TS3_S1-10_780151.dgn
caterm