DocuSign Envelope ID: 76AEEEE8-F9B4-4C51-AB0B-242AF0C7BF1E

PROJECT REFERENCE NO.	SHEET NO.
BR-0041	Sig. 2.1

18 CHANNEL CONFLICT MONITOR PROGRAMMING DETAIL

(remove jumpers and set switches as shown)

REMOVE DIODE JUMPERS 1-3, 1-6, 1-9, 1-10, 1-11, 2-6, 2-9, 2-11, 3-6, 3-9, 3-10, 3-11, 4-8, 4-10, 6-9, 6-10, 6-11, 8-10, 9-10, 9-11 and 10-11.

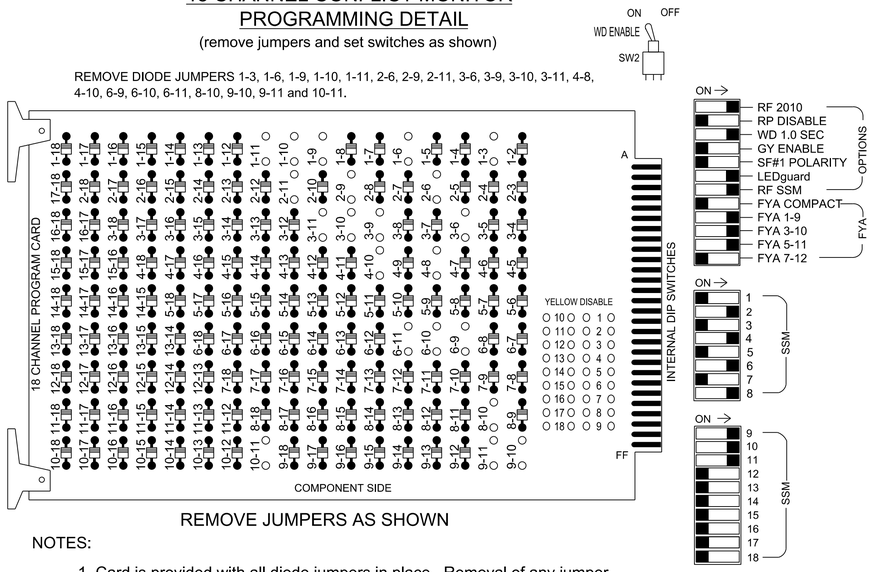

REMOVE JUMPERS AS SHOWN

NOTES:

1. Card is provided with all diode jumpers in place. Removal of any jumper allows its channels to run concurrently.
2. Ensure jumpers SEL2-SEL5 and SEL9 are present on the monitor board.
3. Ensure that the Red Enable is active at all times during normal operation.
4. Connect serial cable from conflict monitor to comm. port 1 of 2070 controller. Ensure conflict monitor communicates with 2070.

NOTES

1. To prevent "flash-conflict" problems, insert red flash program blocks for all unused vehicle load switches in the output file. The installer shall verify that signal heads flash in accordance with the signal plan.
2. Program phases 4 and 8 for Dual Entry.
3. Program controller to start up in phase 2 Green No Walk and 6 Green No Walk.
4. If this signal will be managed by an ATMS software, enable controller and detector logging for all detectors used at this location.
5. The cabinet and controller are part of NC 87/ SR 2817 (Barnes Street) Closed Loop System. Signal System #: D07-10 Reidsville.

EQUIPMENT INFORMATION

Controller.....2070LX
Cabinet.....332 w/ Aux
Software.....Q-Free MAXTIME
Cabinet Mount.....BASE
Output File Positions.....18 With Aux. Output File
Load Switches Used.....S1, S2, S4, S5, S8, S11, AUX S1, AUX S2, AUX S4
Phases Used.....1, 2, 4, 6, 8
Overlap "1".....*
Overlap "2".....*
Overlap "3".....*
Overlap "4".....NOT USED

*See overlap programming detail on sheet 2

SIGNAL HEAD HOOK-UP CHART

LOAD SWITCH NO.	S1	S2	S3	S4	S5	S6	S7	S8	S9	S10	S11	S12	AUX S1	AUX S2	AUX S3	AUX S4	AUX S5	AUX S6
CMU CHANNEL NO.	1	2	13	3	4	14	5	6	15	7	8	16	9	10	17	11	12	18
PHASE	1	2	2 PED	1	4	4 PED	5	6	6 PED	7	8	8 PED	OL1	OL2	SPARE	OL3	OL4	SPARE
SIGNAL HEAD NO.	11★	22,23	NU	83★	41,42	NU	NU	61,62	NU	NU	81,82	NU	11★	83★	NU	21★	NU	NU
RED		128			101			134			107			A124				
YELLOW	*	129		*	102			135			108							
GREEN		130			103			136			109							
RED ARROW													A121			A114		
YELLOW ARROW													A122	A125		A115		
FLASHING YELLOW ARROW													A123	A126		A116		
GREEN ARROW	127			118														

NU = Not Used

* Denotes install load resistor. See load resistor installation detail this sheet.

★See pictorial of head wiring in detail this sheet.

FYA SIGNAL WIRING DETAIL

(wire signal heads as shown)

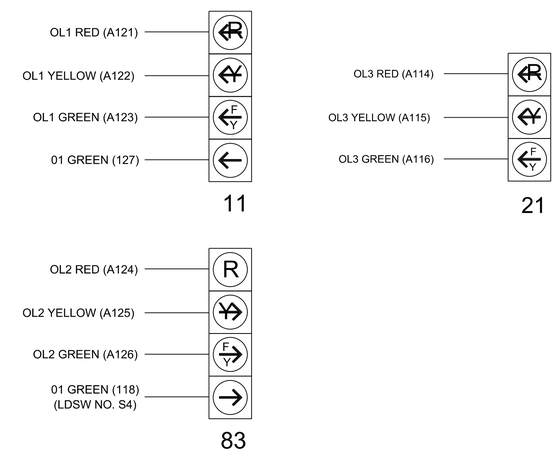

INPUT FILE POSITION LAYOUT

(front view)

		1	2	3	4	5	6	7	8	9	1O	11	12	13	14
FILE "I"	U	SLOT EMPTY	SLOT EMPTY	SLOT EMPTY	SLOT EMPTY	SLOT EMPTY	SLOT EMPTY	SLOT EMPTY	SLOT EMPTY	SLOT EMPTY	SLOT EMPTY	SLOT EMPTY	SLOT EMPTY	SLOT EMPTY	FS DC ISOLATOR
	L														ST DC ISOLATOR
FILE "J"	U	SLOT EMPTY	SLOT EMPTY	SLOT EMPTY	SLOT EMPTY	SLOT EMPTY	SLOT EMPTY	SLOT EMPTY	SLOT EMPTY	SLOT EMPTY	SLOT EMPTY	SLOT EMPTY	SLOT EMPTY	SLOT EMPTY	SLOT EMPTY
	L														

EX. : 1A, 2A, ETC. = LOOP NO.'S

FS = FLASH SENSE
ST = STOP TIME

SPECIAL DETECTOR NOTE

Install a video detection system for vehicle detection. Perform installation according to manufacturer's directions and NCDOT engineer-approved mounting locations to accomplish the detection schemes shown on the Signal Design Plans.

LOAD RESISTOR INSTALLATION DETAIL

(install resistors as shown)

ACCEPTABLE VALUES	
Value (ohms)	Wattage
1.5K - 1.9K	25W (min)
2.0K - 3.0K	10W (min)

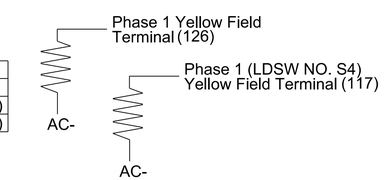

THIS ELECTRICAL DETAIL IS FOR
THE SIGNAL DESIGN: 07-1622T1
DESIGNED: Jan 2023
SEALED: 3/10/2023
REVISED:

AECOM
NC Firm License No.: F-0342
5438 Wade Park Boulevard
Suite 200, Raleigh, NC 27607
Phone: 919-461-1100

Temporary Design 1 (TMP Phase I)
Electrical Detail - Sheet 1 of 2

DOCUMENT NOT CONSIDERED FINAL UNLESS ALL SIGNATURES COMPLETED

Electrical and Programming Details For:

SR 2817 (Barnes Street)
at
Watlington Industrial Drive

Division 7 Rockingham County Reidsville

Prepared for the Offices of:
Transportation Mobility and Safety Division
ITS & Signals Management Section
750 N. Greenfield Pkwy, Garner, NC 27529

PLAN DATE:	January 2023	REVIEWED BY:	H M Surti
PREPARED BY:	A Ravipati	REVIEWED BY:	

REVISIONS	INIT.	DATE

SEAL
NORTH CAROLINA PROFESSIONAL SEAL 034481 ENGINEER HEMANG M. SURTI

DocuSigned by:
Hemang M. Surti 3/10/2023
SIGNATURE

SIG. INVENTORY NO. 07-1622T1

3/10/2023
pw:\\aecom-na-pw.bentley.com:AECOM_DS21_NA_2022\Documents\60581517-NCDOT SMU BR-0041\900-CAD GIS\910_CADKTO_NCDOT_TIP\Signals\Design\Electrical Details_2022\MAXTIME_3-10-23\07162T1_smu_ele_2022XXXX.dgn
mitchell.cavenaugh