DocuSign Envelope ID: F41711FF-C3E6-4795-971D-0ABAC56EE0D9

PROJECT REFERENCE NO.	SHEET NO.
BR-0041	2A-4

ROADWAY DESIGN ENGINEER

NORTH CAROLINA PROFESSIONAL SEAL 18470 ENGINEER EDWARD GLENN EDENS, JR.

DocuSigned by: Edward Glenn Edens, Jr.
4/13/2023 | 8:44:00 AM EDT

PAVEMENT DESIGN ENGINEER

NORTH CAROLINA PROFESSIONAL SEAL 022896 ENGINEER CLARK S. MORRISON

DocuSigned by: Clarke S. Morrison
4/13/2023 | 2:00:00 PM EDT

Prepared in the Office of: AECOM

NC FIRM LICENSE No: F-0342
5438 Wade Park Boulevard, Suite 200
Raleigh, NC 27607
(919) 854-6200 - (919) 854-6259(FAX)

DOCUMENT NOT CONSIDERED FINAL UNLESS ALL SIGNATURES COMPLETED

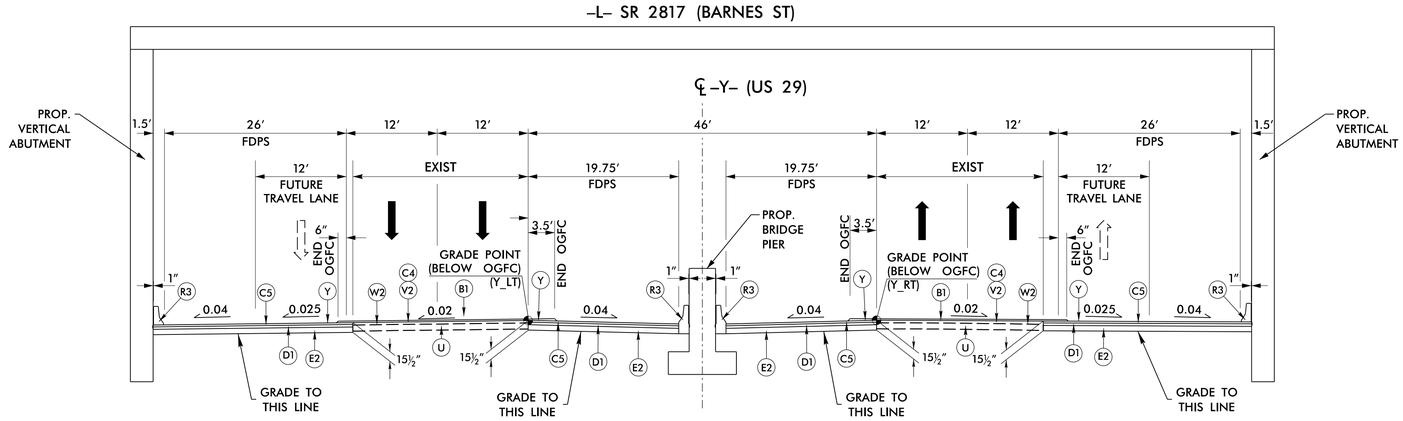

TYPICAL SECTION UNDER STRUCTURE

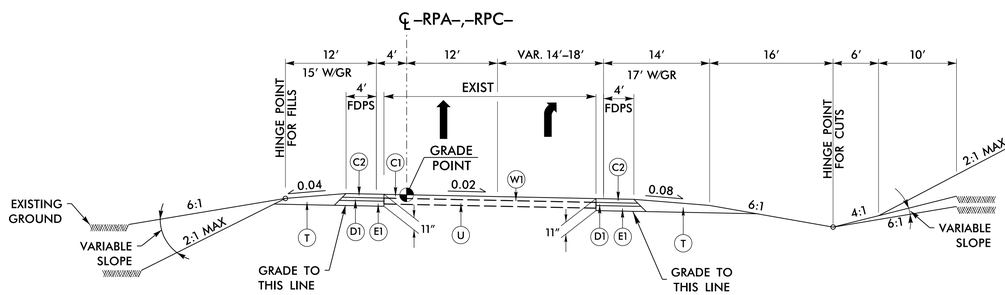

TYPICAL SECTION NO. 7

USE TYPICAL SECTION NO. 7
–RPA– STA. 12+50.00 TO –RPA– STA. 13+51.82
–RPC– STA. 12+20.00 TO –RPC– STA. 13+61.19

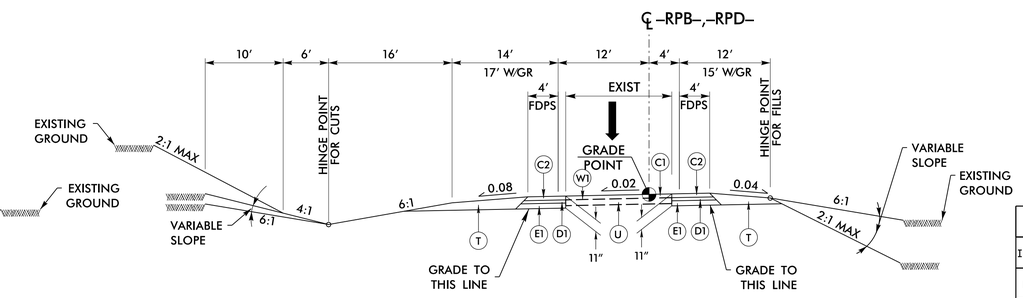

TYPICAL SECTION NO. 8

USE TYPICAL SECTION NO. 8
–RPB– STA. 15+00.00 TO –RPB– STA. 16+31.73
–RPD– STA. 11+70.00 TO –RPD– STA. 13+75.65

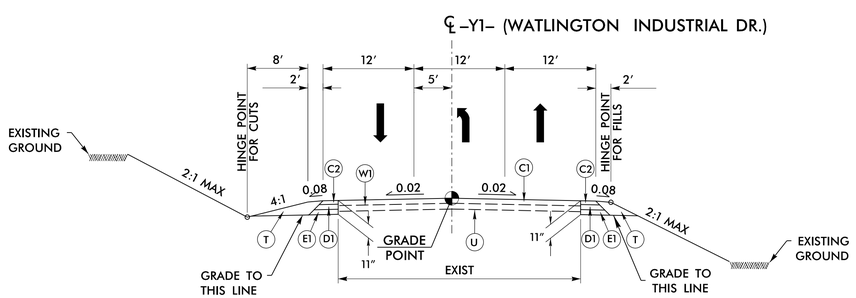

TYPICAL SECTION NO. 9

USE TYPICAL SECTION NO. 9
–Y1– STA. 11+00.00 TO –Y1– STA. 12+19.22

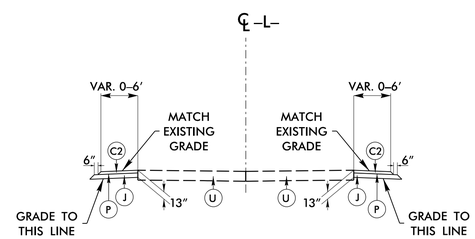

TYPICAL SECTION NO. 10

USE TYPICAL SECTION NO. 10
TEMPORARY PAVEMENT SEE TMP
–L– STA.32+13.27 TO 32+21.98
–L– STA.31+55.83 TO 33+39.07
–L– STA.35+69.11 TO 38+34.72
–L– STA.35+99.19 TO 38+28.72
–L– STA.38+50.31 TO 38+62.39

NOTE: USE SAME PAVEMENT DESIGN ON –Y– (US 29) TEMPORARY SHOULDER PAVEMENT. SEE TYPICAL SECTION NO.6 AND TMP

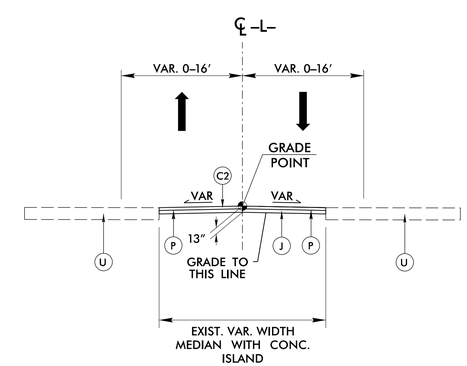

TYPICAL SECTION NO. 11

USE TYPICAL SECTION NO. 11
TEMPORARY PAVEMENT SEE TMP
–L– STA.29+58.24 TO 31+60.59
–L– STA.38+53.65 TO 39+81.73

PAVEMENT SCHEDULE

ITEM	DESCRIPTION
B1	¾″ OGFC TYPE FC-1 MODIFIED
C1	1½″ S9.5B
C2	3″ S9.5B
C3	VAR. S9.5B
C4	1½″ S9.5C
C5	3″ S9.5C
C6	VAR. S9.5C
D1	4″ I19.0C
D2	VAR. I19.0C
E1	4″ B25.0C
E2	8½″ B25.0C
E3	VAR. B25.0C
J	10″ ABC
P	PRIME COAT
R1	2′-6″ C&G
R2	5″ MONO. ISLAND
R3	SINGLE FACE CONC. BAR.
R4	SHOULDER BERM GUTTER
T	EARTH MATERIAL
U	EXISTING PAVEMENT
V1	1½″ MILLING
V2	¾″ MILLING
Y	RUMBLE STRIPS
W1	WEDGING DET. #1
W2	WEDGING DET. #2

6/2/99
2/15/2023
DWebb2005
...IS\910_CAD\70_NCDOT_TIP\Roadway\Design\BR0041_rdy_typ.dgn
...:AECOM.DS21.NA.2020\Documents\60581577-NCDOT SMU BR-0041\900-CAD GIS\910-CAD
...bentley.com:AECOM-na-pw