DocuSign Envelope ID: 42ED26A6-DDD5-4ECB-BABB-8DDEDA08515A

PROJ. REFERENCE NO.	SHEET NO.
BP7.R006	TMP-4

HDR Engineering, Inc. of the Carolinas
555 Fayetteville St, Suite 900 Raleigh, N.C. 27601
N.C.B.E.L.S. License Number: F-0116

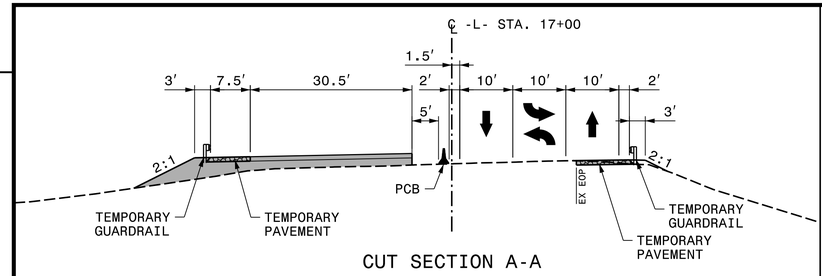

CUT SECTION A-A

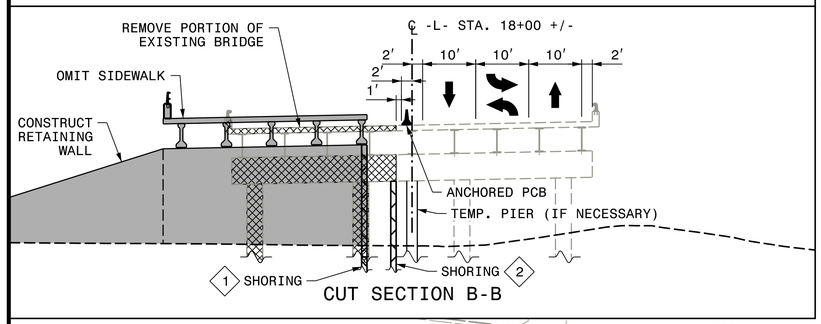

CUT SECTION B-B

STATIONS BEFORE STA. 12+50 ARE APPROXIMATED ALONG THE CENTERLINE OF THE ROAD

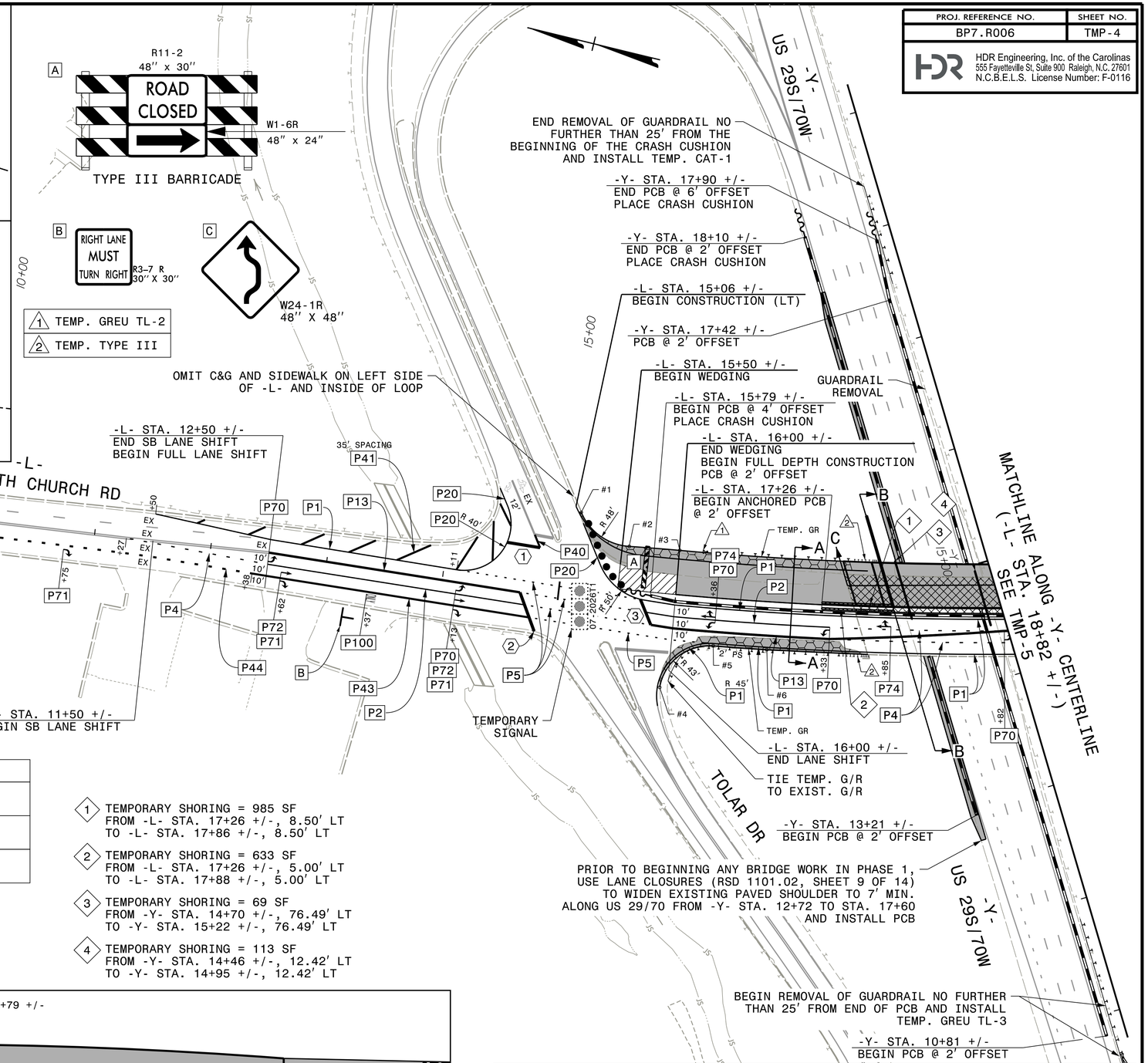

T61 STOPBAR LOCATIONS	
1	-L- STA. 14+79.82, 34.66′ LT to -L- STA. 14+51.24, 35.83′ LT
2	-L- STA. 14+67.21, 5.31′ RT to -L- STA. 14+83.24, 36.91′ RT
3	-L- STA. 15+81.20, 20.33′ RT to -L- STA. 15+70.19, 0.60′ LT

TEMPORARY PAVEMENT EDGE OFFSETS	
#1 -L- STA. 15+11.11, 68.90′ LT	CONSTRUCT TEMPORARY PAVEMENT ON THE RIGHT SIDE OF -L- PRIOR TO PLACING TRAFFIC IN THE PHASE 1 PATTERN SHOWN
#2 -L- STA. 15+56.01, 44.60′ LT	
#3 -L- STA. 16+00.00, 45.50′ LT	
#4 -L- STA. 15+93.70, 72.79′ RT	
#5 -L- STA. 16+35.49, 33.50′ RT	
#6 -L- STA. 16+81.02, 33.50′ RT	

1. TEMPORARY SHORING = 985 SF
FROM -L- STA. 17+26 +/-, 8.50′ LT
TO -L- STA. 17+86 +/-, 8.50′ LT

2. TEMPORARY SHORING = 633 SF
FROM -L- STA. 17+26 +/-, 5.00′ LT
TO -L- STA. 17+88 +/-, 5.00′ LT

3. TEMPORARY SHORING = 69 SF
FROM -Y- STA. 14+70 +/-, 76.49′ LT
TO -Y- STA. 15+22 +/-, 76.49′ LT

4. TEMPORARY SHORING = 113 SF
FROM -Y- STA. 14+46 +/-, 12.42′ LT
TO -Y- STA. 14+95 +/-, 12.42′ LT

* SHORING PLACED FOR EXISTING PIER/FOOTING REMOVAL

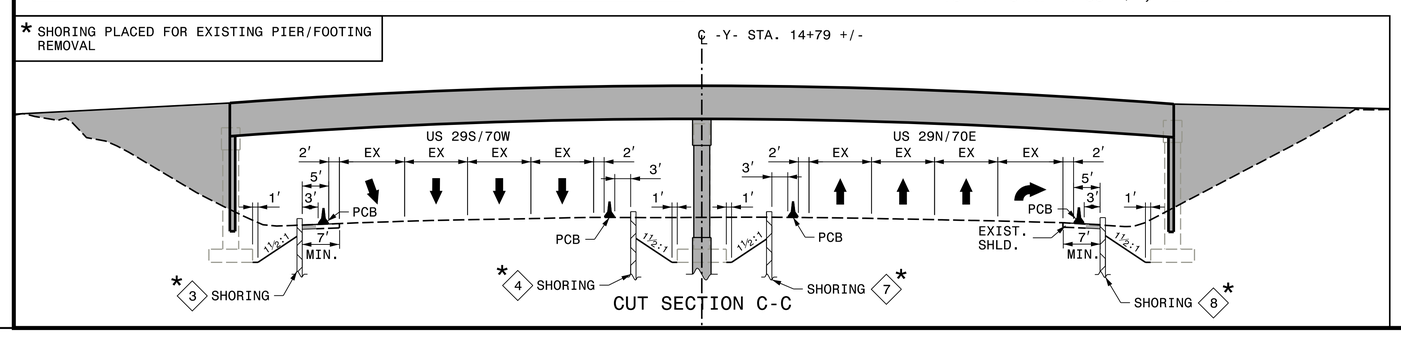

CUT SECTION C-C

APPROVED: Michael T. Rzepka

DATE: 2/7/2023

SEAL

NORTH CAROLINA PROFESSIONAL SEAL 15876 ENGINEER MICHAEL T. RZEPKA

DIVISION OF HIGHWAYS STATE OF NORTH CAROLINA DEPARTMENT OF TRANSPORTATION WORK ZONE TRAFFIC CONTROL

PHASE 1

DOCUMENT NOT CONSIDERED FINAL UNLESS ALL SIGNATURES COMPLETED

REVISIONS

PLOT DRIVER: NCDOT_pdf_color_eng_50.plt PENTABLE: NCDOT_tcp.tbl
USER: CHARNDEN DATE: 2/7/2023 TIME: 1:53:22 PM
FILE: pw:\\pwhdruseas01:HDR_US_East_01\Documents\5705\10127116\6.0_CAD_BIM\6.2_WIP\Traffic\TrafficControl\TCP\400225_TC_TMP04.dgn