DocuSign Envelope ID: E92B913B-CFCE-4560-AA0C-9C3AD02F09E5

8/26/21

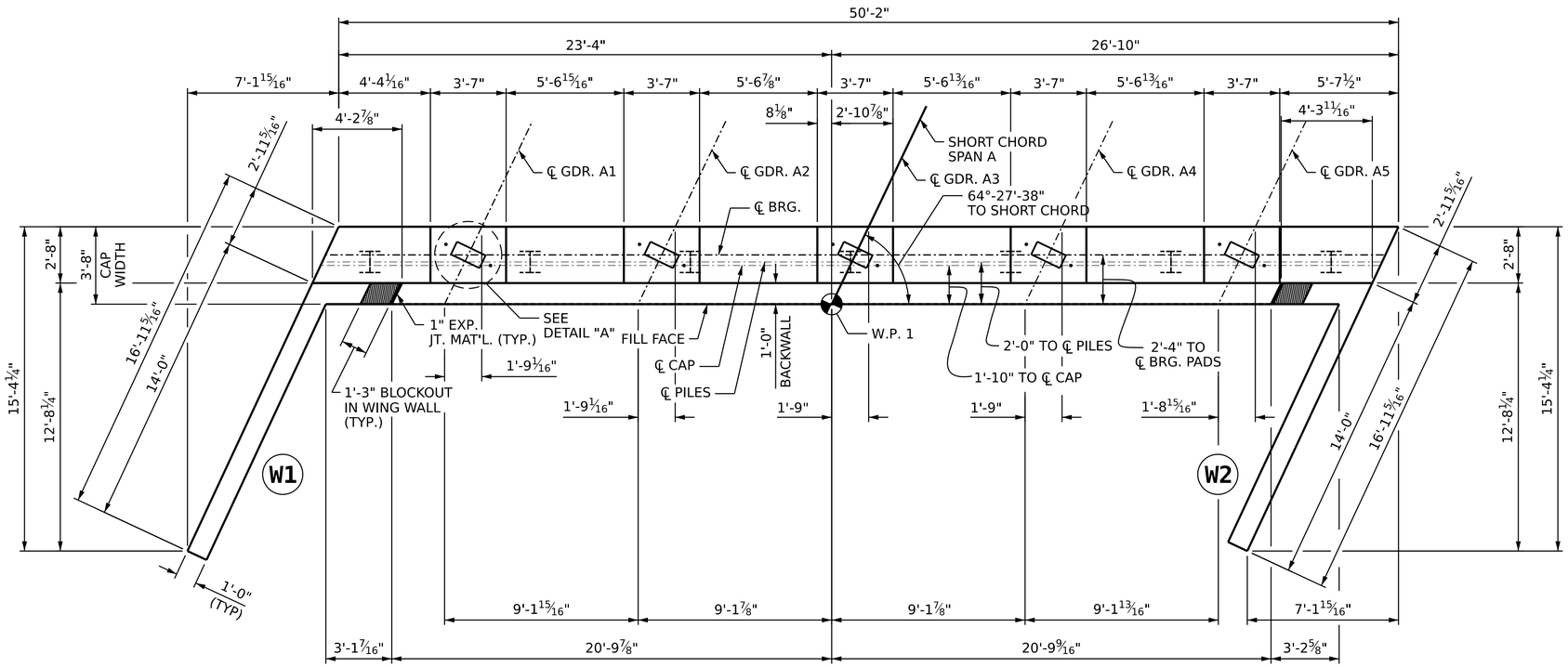

PLAN

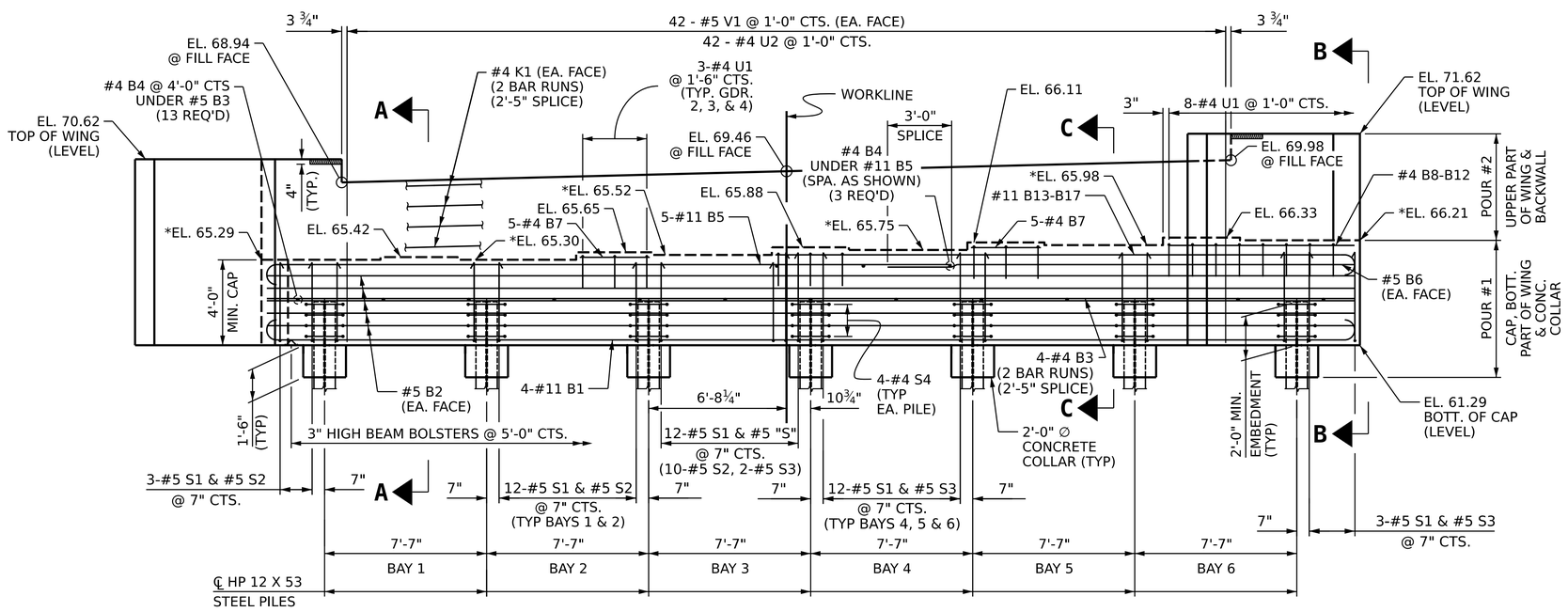

ELEVATION

NOTES:

STIRRUPS IN CAP MAY BE SHIFTED AS NECESSARY TO CLEAR #5 V1 BARS AND ANCHOR BOLTS.

THE CONTRACTOR SHALL BE RESPONSIBLE FOR TEMPORARY DRAINAGE AND EROSION CONTROL AT THE END BENT.

FOR SECTIONS A-A, B-B, AND C-C, SEE SHEET 3 OF 3.

* THE TOP SURFACE AREAS OF THE CAP EXCEPT THE BRIDGE SEATS SHALL BE SLOPED TRANSVERSELY FROM THE FILL FACE AT THE RATE OF 2%.

THE TOP SURFACE AREAS OF THE END BENT CAPS SHALL BE CURED IN ACCORDANCE WITH THE STANDARD SPECIFICATIONS, EXCEPT THE MEMBRANE CURING COMPOUND METHOD SHALL NOT BE USED.

BACKWALL SHALL BE PLACED BEFORE APPLYING THE EPOXY PROTECTIVE COATING.

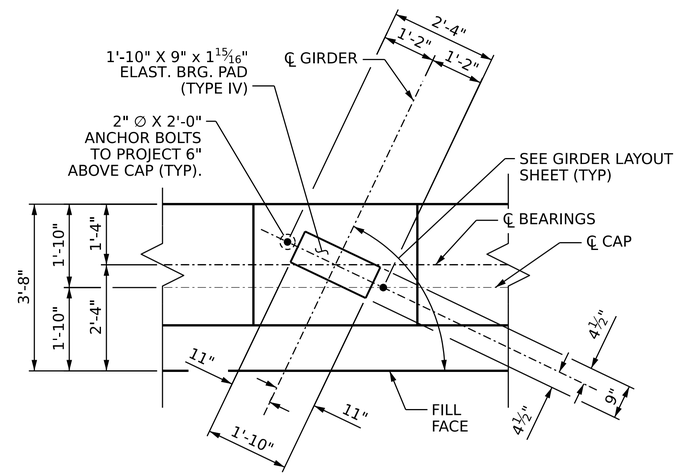

DETAIL "A"

PROJECT NO. BR-0073

COLUMBUS COUNTY

STATION: 18+24.50 -L-

SHEET 1 OF 3

STATE OF NORTH CAROLINA
DEPARTMENT OF TRANSPORTATION
RALEIGH

SUBSTRUCTURE
END BENT 1

NORTH CAROLINA PROFESSIONAL SEAL 48615 ENGINEER PATRICK N. HOLDER

Patrick Holder
31822A23B4C0F3...
2/23/2023

VOLKERT
5430 Wade Park Blvd., Suite 410
Raleigh, NC 27607
Tel. 919-854-0344 Fax. 919-854-0355
NC License No. F-0765

DOCUMENT NOT CONSIDERED FINAL UNLESS ALL SIGNATURES COMPLETED

REVISIONS									SHEET NO.
NO.	BY:	DATE:	NO.	BY:	DATE:				S-25
1			3						TOTAL SHEETS
2			4						38

DRAWN BY :	B.H. BARNHILL	DATE :	09/22
CHECKED BY :	D. GLADDEN	DATE :	11/22
DESIGN ENGINEER OF RECORD:	P. N. HOLDER	DATE :	11/22

2/22/2023
R:\New Raleigh Data\PROJECTS\Engineering Projects\1037701.160 BR-0073 Columbus 5\Structures\FinalPlans\401_051_BR0073_SMU_E1_S23_230005.dgn
annie.wu