DocuSign Envelope ID: E92B913B-CFCE-4560-AA0C-9C3AD02F09E5

BILL OF MATERIAL

BAR	NO.	SIZE	TYPE	LENGTH	WEIGHT
* A1	288	#5	STR	38'-11"	11690
A2	288	#5	STR	38'-11"	11690
* A101	1	#5	STR	38'-4"	40
* A102	1	#5	STR	37'-3"	39
* A103	1	#5	STR	36'-3"	38
* A104	1	#5	STR	35'-2"	37
* A105	1	#5	STR	34'-1"	36
* A106	1	#5	STR	33'-0"	34
* A107	1	#5	STR	32'-0"	33
* A108	1	#5	STR	30'-11"	32
* A109	1	#5	STR	29'-10"	31
* A110	1	#5	STR	28'-9"	30
* A111	1	#5	STR	27'-8"	29
* A112	1	#5	STR	26'-7"	28
* A113	1	#5	STR	25'-7"	27
* A114	1	#5	STR	24'-6"	26
* A115	1	#5	STR	23'-5"	24
* A116	1	#5	STR	22'-4"	23
* A117	1	#5	STR	21'-3"	22
* A118	1	#5	STR	20'-3"	21
* A119	1	#5	STR	19'-2"	20
* A120	1	#5	STR	18'-1"	19
* A121	1	#5	STR	17'-0"	18
* A122	1	#5	STR	16'-0"	17
* A123	1	#5	STR	14'-11"	16
* A124	1	#5	STR	13'-10"	14
* A125	1	#5	STR	12'-9"	13
* A126	1	#5	STR	11'-8"	12
* A127	1	#5	STR	10'-8"	11
* A128	1	#5	STR	9'-7"	10
* A129	1	#5	STR	8'-6"	9
* A130	1	#5	STR	7'-5"	8
* A131	1	#5	STR	6'-4"	7
* A132	1	#5	STR	5'-4"	6
* A133	1	#5	STR	4'-3"	4
* A134	1	#5	STR	3'-2"	3
* A135	1	#5	STR	2'-1"	2
* A136	1	#5	STR	38'-4"	40
* A137	1	#5	STR	37'-3"	39
* A138	1	#5	STR	36'-2"	38

BAR	NO.	SIZE	TYPE	LENGTH	WEIGHT
* A139	1	#5	STR	35'-1"	37
* A140	1	#5	STR	34'-0"	35
* A141	1	#5	STR	33'-0"	34
* A142	1	#5	STR	31'-11"	33
* A143	1	#5	STR	30'-10"	32
* A144	1	#5	STR	29'-9"	31
* A145	1	#5	STR	28'-8"	30
* A146	1	#5	STR	27'-7"	29
* A147	1	#5	STR	26'-6"	28
* A148	1	#5	STR	25'-5"	27
* A149	1	#5	STR	24'-4"	25
* A150	1	#5	STR	23'-3"	24
* A151	1	#5	STR	22'-2"	23
* A152	1	#5	STR	21'-1"	22
* A153	1	#5	STR	20'-0"	21
* A154	1	#5	STR	18'-11"	20
* A155	1	#5	STR	17'-10"	19
* A156	1	#5	STR	16'-10"	18
* A157	1	#5	STR	15'-9"	16
* A158	1	#5	STR	14'-8"	15
* A159	1	#5	STR	13'-7"	14
* A160	1	#5	STR	12'-6"	13
* A161	1	#5	STR	11'-5"	12
* A162	1	#5	STR	10'-4"	11
* A163	1	#5	STR	9'-3"	10
* A164	1	#5	STR	8'-2"	9
* A165	1	#5	STR	7'-1"	7
* A166	1	#5	STR	6'-0"	6
* A167	1	#5	STR	4'-11"	5
* A168	1	#5	STR	3'-10"	4
* A169	1	#5	STR	2'-9"	3
A201	1	#5	STR	38'-4"	40
A202	1	#5	STR	37'-3"	39
A203	1	#5	STR	36'-3"	38
A204	1	#5	STR	35'-2"	37
A205	1	#5	STR	34'-1"	36
A206	1	#5	STR	33'-0"	34
A207	1	#5	STR	32'-0"	33
A208	1	#5	STR	30'-11"	32
A209	1	#5	STR	29'-10"	31
A210	1	#5	STR	28'-9"	30

BAR	NO.	SIZE	TYPE	LENGTH	WEIGHT
A211	1	#5	STR	27'-8"	29
A212	1	#5	STR	26'-7"	28
A213	1	#5	STR	25'-7"	27
A214	1	#5	STR	24'-6"	26
A215	1	#5	STR	23'-5"	24
A216	1	#5	STR	22'-4"	23
A217	1	#5	STR	21'-3"	22
A218	1	#5	STR	20'-3"	21
A219	1	#5	STR	19'-2"	20
A220	1	#5	STR	18'-1"	19
A221	1	#5	STR	17'-0"	18
A222	1	#5	STR	16'-0"	17
A223	1	#5	STR	14'-11"	16
A224	1	#5	STR	13'-10"	14
A225	1	#5	STR	12'-9"	13
A226	1	#5	STR	11'-8"	12
A227	1	#5	STR	10'-8"	11
A228	1	#5	STR	9'-7"	10
A229	1	#5	STR	8'-6"	9
A230	1	#5	STR	7'-5"	8
A231	1	#5	STR	6'-4"	7
A232	1	#5	STR	5'-4"	6
A233	1	#5	STR	4'-3"	4
A234	1	#5	STR	3'-2"	3
A235	1	#5	STR	2'-1"	2
A236	1	#5	STR	38'-4"	40
A237	1	#5	STR	37'-3"	39
A238	1	#5	STR	36'-2"	38
A239	1	#5	STR	35'-1"	37
A240	1	#5	STR	34'-0"	35
A241	1	#5	STR	33'-0"	34
A242	1	#5	STR	31'-11"	33
A243	1	#5	STR	30'-10"	32
A244	1	#5	STR	29'-9"	31
A245	1	#5	STR	28'-8"	30
A246	1	#5	STR	27'-7"	29
A247	1	#5	STR	26'-6"	28
A248	1	#5	STR	25'-5"	27
A249	1	#5	STR	24'-4"	25
A250	1	#5	STR	23'-3"	24
A251	1	#5	STR	22'-2"	23

BAR	NO.	SIZE	TYPE	LENGTH	WEIGHT
A252	1	#5	STR	21'-1"	22
A253	1	#5	STR	20'-0"	21
A254	1	#5	STR	18'-11"	20
A255	1	#5	STR	17'-10"	19
A256	1	#5	STR	16'-10"	18
A257	1	#5	STR	15'-9"	16
A258	1	#5	STR	14'-8"	15
A259	1	#5	STR	13'-7"	14
A260	1	#5	STR	12'-6"	13
A261	1	#5	STR	11'-5"	12
A262	1	#5	STR	10'-4"	11
A263	1	#5	STR	9'-3"	10
A264	1	#5	STR	8'-2"	9
A265	1	#5	STR	7'-1"	7
A266	1	#5	STR	6'-0"	6
A267	1	#5	STR	4'-11"	5
A268	1	#5	STR	3'-10"	4
A269	1	#5	STR	2'-9"	3
* B1	100	#5	STR	28'-9"	2999
* B2	106	#5	STR	47'-6"	5252
* B3	56	#5	STR	24'-2"	1485
* B4	28	#5	STR	28'-11"	844
B5	84	#5	STR	35'-0"	3066
B6	96	#5	STR	41'-3"	4130
B7	96	#5	STR	26'-2"	2620
B8	48	#5	STR	36'-6"	1827
* G1	1	#5	STR	43'-2"	45
* G2	1	#5	STR	42'-8"	45
* K1	8	#8	1	12'-4"	263
* K2	12	#8	2	18'-10"	603
* K3	24	#6	STR	6'-7"	237
* S1	48	#5	3	5'-2"	259
* S2	48	#4	4	5'-8"	182
REINFORCING STEEL					24,802
* EPOXY COATED REINFORCING STEEL					25,298

BAR TYPES

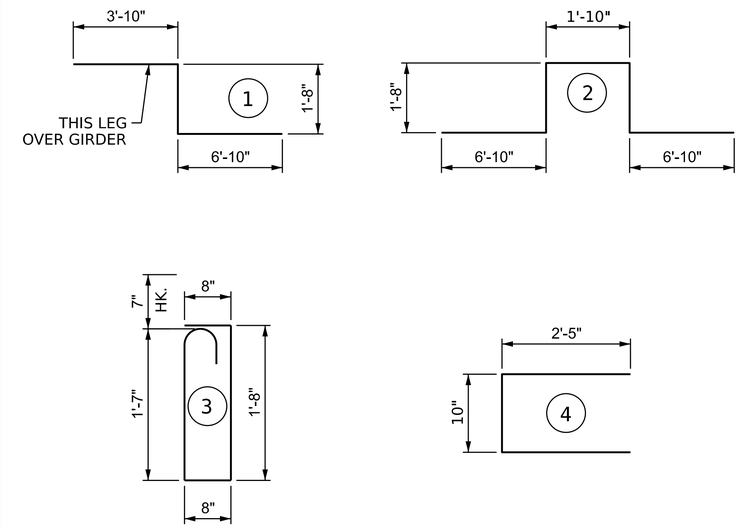

ALL BAR DIMENSIONS ARE OUT TO OUT

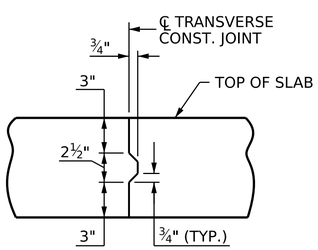

TRANSVERSE CONSTRUCTION JOINT DETAIL

NOTE: REINFORCING STEEL IN SLAB NOT SHOWN. LONGITUDINAL REINFORCING STEEL SHALL BE CONTINUOUS THRU JOINT

SUPERSTRUCTURE REINFORCING STEEL LENGTHS ARE BASED ON THE FOLLOWING MINIMUM SPLICE LENGTHS

BAR SIZE	SUPERSTRUCTURE EXCEPT APPROACH SLABS, PARAPETS, AND BARRIER RAILS		APPROACH SLABS		PARAPETS AND BARRIER RAILS
	EPOXY COATED	UNCOATED	EPOXY COATED	UNCOATED	
#4	1'-11"	1'-7"	1'-11"	1'-7"	2'-6"
#5	2'-5"	2'-0"	2'-5"	2'-0"	3'-1"
#6	2'-10"	2'-5"	3'-7"	2'-5"	3'-8"
#7	4'-2"	2'-9"	——	——	——
#8	4'-9"	3'-2"	——	——	——

PROJECT NO. BR-0073
COLUMBUS COUNTY
STATION: 18+24.50 -L-

SHEET 1 OF 2

STATE OF NORTH CAROLINA
DEPARTMENT OF TRANSPORTATION
RALEIGH

SUPERSTRUCTURE

BILL OF MATERIAL

NORTH CAROLINA PROFESSIONAL SEAL 48615 ENGINEER PATRICK NEIL HOLDER
31822A236FC2473... 2/23/2023

VOLKERT
5430 Wade Park Blvd., Suite 410
Raleigh, NC 27607
Tel. 919-854-0344 Fax. 919-854-0355
NC License No. F-0765

DOCUMENT NOT CONSIDERED FINAL UNLESS ALL SIGNATURES COMPLETED

REVISIONS						SHEET NO.
NO.	BY:	DATE:	NO.	BY:	DATE:	S-23
1			3			TOTAL SHEETS
2			4			38

DRAWN BY : A. Y. WU DATE : 10/22
CHECKED BY : D. A. GLADDEN DATE : 10/22
DESIGN ENGINEER OF RECORD: P.N. HOLDER DATE : 11/22

2/10/2023
R:\New Raleigh Data\PROJECTS\Engineering Projects\1037701.160 BR-0073 Columbus 5\Structures\FinalPlans\401_047_BR0073_SMU_BM.dgn
annie.wu