DocuSign Envelope ID: 74945C52-9F6F-4D9B-AC83-19D8D9D5E667

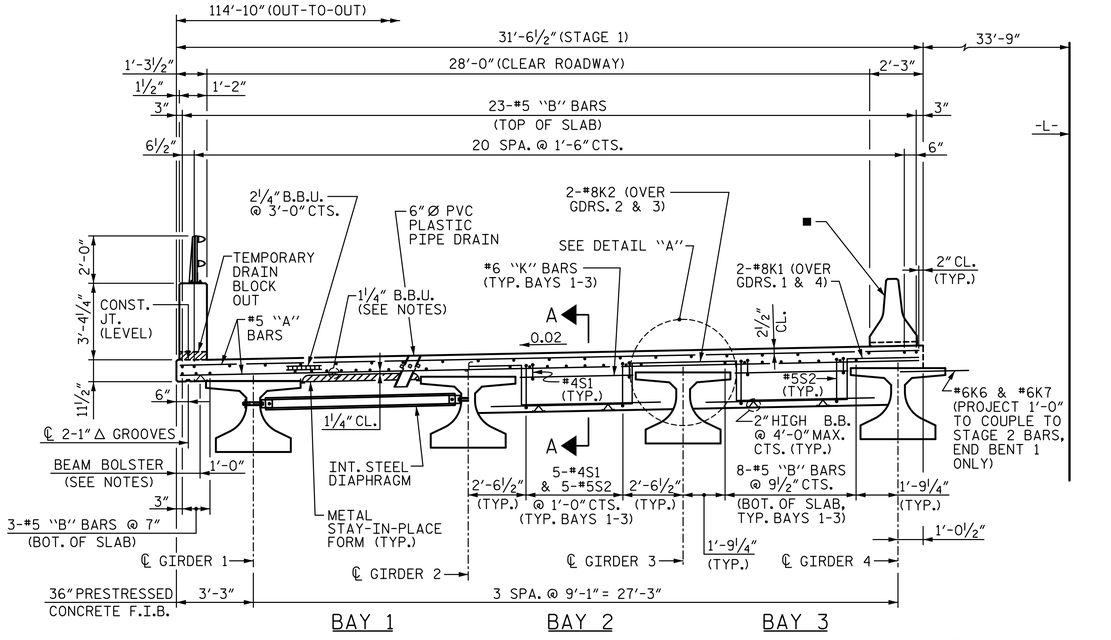

AT MID-SPAN

AT END BENT DIAPHRAGM

■ TEMPORARY BARRIER W/DRAINAGE SLOTS (TO BE ANCHORED TO BRIDGE DECK) SEE NOTES

TYPICAL SECTION

STAGE 1

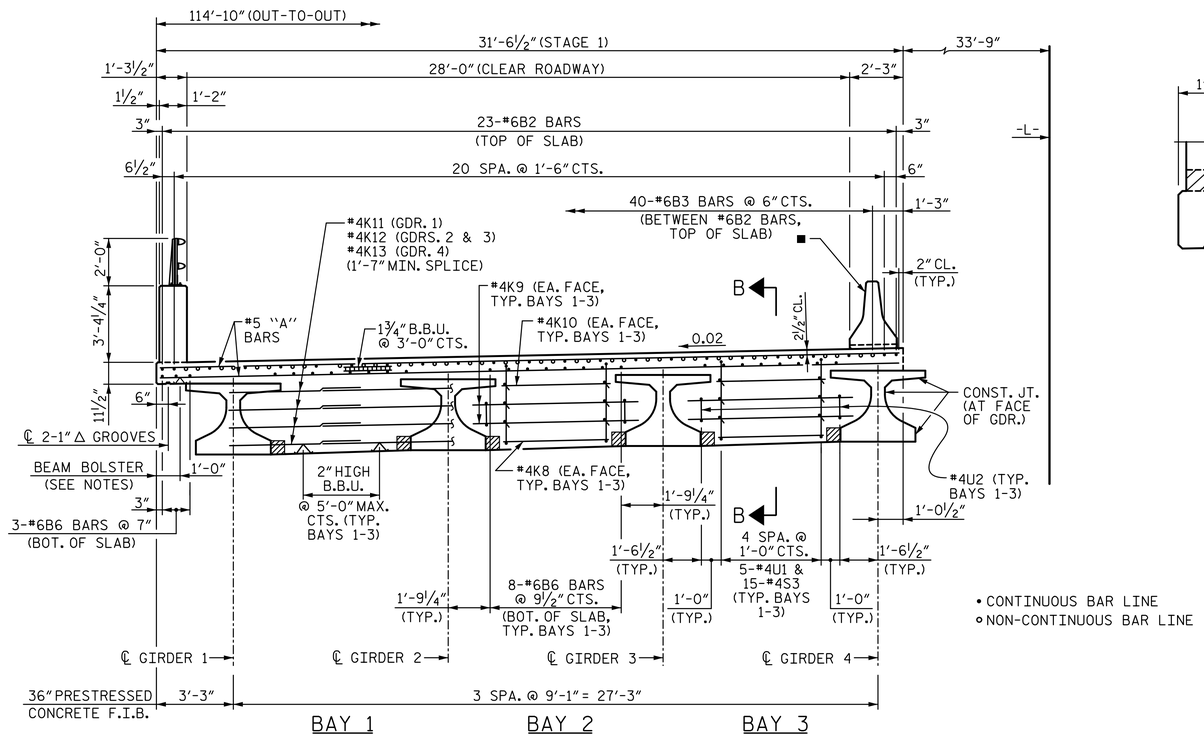

• CONTINUOUS BAR LINE
∘ NON-CONTINUOUS BAR LINE

TYPICAL SECTION AT BENT DIAPHRAGM

STAGE 1

NOTES:

PROVIDE 1¼" HIGH BEAM BOLSTERS UPPER AT 4'-0" CTS. ATOP THE METAL STAY-IN-PLACE FORMS TO SUPPORT THE BOTTOM MAT OF "A" BARS. WHEN USING REMOVEABLE FORMS, PROVIDE CONTINUOUS HIGH CHAIRS FOR METAL DECK (CHCM) AT 4'-0" CTS. WITH A HEIGHT TO SUPPORT THE BOTTOM MAT OF "A" BARS A CLEAR DISTANCE OF 2½" ABOVE THE TOP OF THE REMOVEABLE FORM.

LONGITUDINAL STEEL MAY BE SHIFTED SLIGHTLY, AS NECESSARY, TO AVOID INTERFERENCE WITH STIRRUPS IN PRESTRESSED CONCRETE GIRDERS AND 6" PVC PLASTIC PIPE DRAINS.

HEIGHT OF BEAM BOLSTER IN OVERHANG WILL VARY ALONG THE SPAN. CONTRACTOR SHALL DETERMINE HEIGHT REQUIRED TO MAINTAIN REQUIRED CLEARANCES.

FOR SECTIONS A-A & B-B SEE "SUPERSTRUCTURE DETAILS" SHEETS.

FOR CONCRETE PARAPET, SEE "1'-2" × 3'-4¼" CONCRETE PARAPET" SHEETS.

FOR 2-BAR METAL RAIL, SEE "2-BAR METAL RAIL" SHEETS.

PREVIOUSLY CAST CONCRETE IN A CONTINUOUS UNIT SHALL HAVE ATTAINED A MINIMUM COMPRESSIVE STRENGTH OF 3,000 PSI BEFORE ADDITIONAL CONCRETE IS CAST IN THE UNIT.

CONCRETE PARAPET SHALL NOT BE CAST UNITL ALL SLAB CONCRETE HAS BEEN CAST AND ATTAINED A MINIMUM COMPRESSIVE STRENGTH OF 3,000 PSI.

SIDEWALK SHALL BE PLACED IN STAGE 4. FOR DETAILS, SEE "SIDEWALK DETAILS" SHEETS.

FOR INTERMEDIATE STEEL DIAPHRAGMS, SEE "INTERMEDIATE STEEL DIAPHRAGMS FOR 36" FIB" SHEET.

TEMPORARY BARRIER IS A TRAFFIC CONTROL DETAIL AND PAY ITEM, SEE TRAFFIC CONTROL PLANS FOR LOCATIONS AND PAY LIMITS.

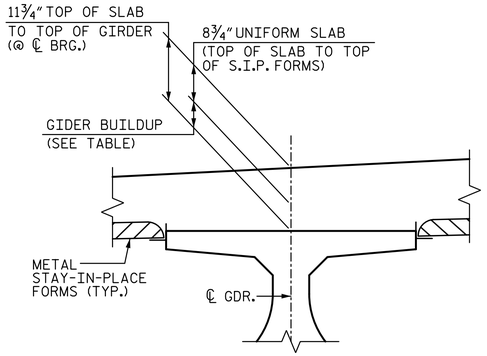

DETAIL "A"

(TYP. EA. GIRDER)

GIRDER BUILDUP		
	℄ BRG.	MAX. @ MIDSPAN▲
SPAN A, GDRS. 3 & 5-12	3"	2⅝"
SPAN B, GDRS. 10 & 11	3"	3"
SPAN C, GDRS. 6-7 & 10-12	3"	2¼"

▲ BASED ON PREDICTED FINAL CAMBER AND THEORETICAL GRADE LINE ELEVATIONS.

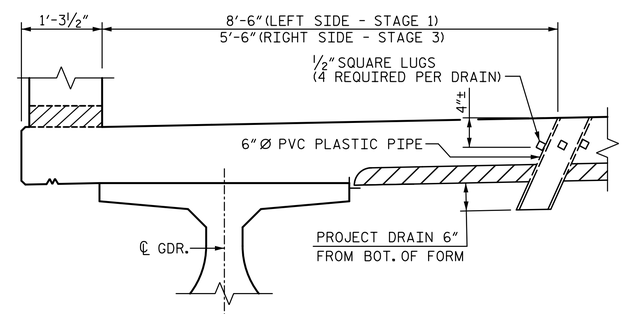

ELEVATION

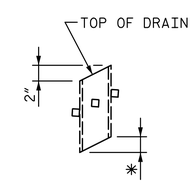

* TO BE SET TO MATCH SLOPE OF BOTTOM OF S.I.P. FORM

(14 DRAINS REQUIRED)

PIPE DETAIL

DRAIN DETAILS

(LEFT SIDE-STAGE 1 SHOWN, RIGHT SIDE-STAGE 3 SIMILAR.)

DRAINS IN STAGE 1 SHALL BE PLUGGED DURING STAGES 1-3. UNPLUG DRAINS AFTER SIDEWALK PLACEMENT IN STAGE 4.

PROJECT NO. B-5808

CABARRUS COUNTY

STATION: 20+64.00 -L-

SHEET 1 OF 4

4/12/2023

NORTH CAROLINA PROFESSIONAL SEAL 029429 ENGINEER JASON T. GRISCOM

DocuSigned by: Jason Griscom
E4ACDE421F244BA...

STV 100 Years
STV ENGINEERS, INC.
900 West Trade St., Suite 715
Charlotte, NC 28202
NC License Number F-0991

DOCUMENT NOT CONSIDERED FINAL UNLESS ALL SIGNATURES COMPLETED

STATE OF NORTH CAROLINA
DEPARTMENT OF TRANSPORTATION
RALEIGH

TYPICAL SECTION
STAGE 1

REVISIONS						SHEET NO.
NO.	BY:	DATE:	NO.	BY:	DATE:	S-8
1			3			TOTAL SHEETS
2			4			65

ASSEMBLED BY :	SGH	DATE :	7-21
CHECKED BY :	MLO	DATE :	11-22
DESIGN ENGINEER OF RECORD :	J. GRISCOM	DATE :	3-23

mosborne 4/12/2023 3:16:52 PM R:\Structures\04_Ustation\05 RFC Bridge Plans\401_015_B5808_SMU_TSI_008_I20057.dgn