DocuSign Envelope ID: 2F806D6F-B008-4EEB-B9D6-E4A4A48E6432

5/14/99

# CITY OF CONCORD STANDARD DETAILS

| PROJECT REFERENCE NO. | SHEET NO. |
|---|---|
| B-5808 | UC-3B |

DESIGNED BY: NKA
DRAWN BY: NKA
CHECKED BY: ASV
APPROVED BY:
REVISED:

NORTH CAROLINA DEPARTMENT OF TRANSPORTATION

UTILITIES ENGINEERING SEC.
PHONE:(919)707-6690
FAX:(919)250-4151

SEAL 025221 ENGINEER ANDREW S. VANE — NORTH CAROLINA PROFESSIONAL ENGINEER SEAL — 1/11/2023

UTILITY CONSTRUCTION PLANS ONLY

UTILITY CONSTRUCTION

**DOCUMENT NOT CONSIDERED FINAL UNLESS ALL SIGNATURES COMPLETED**

STV 100 Years — STV Engineers, Inc. 900 West Trade St., Suite 715 Charlotte, NC 28202 NC License Number F-0991

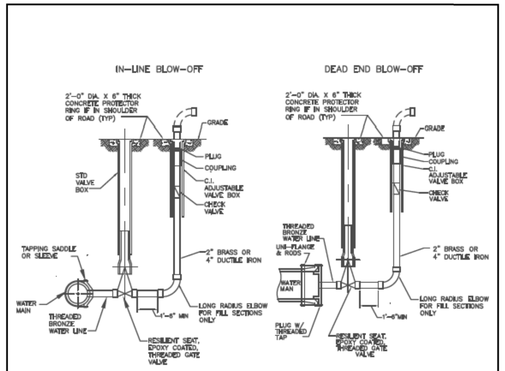


GENERAL NOTES:
1. INSTALL 2" BLOW-OFF ON 2" THRU 18" MAINS.
2. INSTALL 4" BLOW-OFF ON 20" OR LARGER MAIN.
3. IF THE SEPARATION BETWEEN THE CONTROL VALVE AND THE BLOW-OFF DOES NOT ALLOW THE INSTALLATION OF THE CONCRETE PROTECTOR RINGS, A 24" BY 24" BY 6" THICK CONCRETE PAD SHALL BE FORMED AND POURED AROUND THE VALVE BOX. THE EDGE OF THE VALVE BOX RIM MUST BE AT LEAST 8" FROM THE EDGE OF THE CONCRETE PAD.

Concord — CITY OF CONCORD STANDARD DETAIL — BLOW-OFF ASSEMBLY

| No. | Date | By | REVISION |
|---|---|---|---|

| Drawn By: | Checked By: | Approved By: | Date | Sht | of |
|---|---|---|---|---|---|
| SVM | PLK | MSH | 03/10 | | |

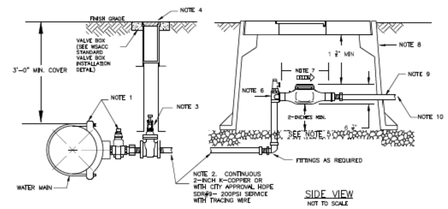


SIDE VIEW
NOT TO SCALE

GENERAL NOTES:
1. 2 – INCH WATER SERVICE SHALL BE INSTALLED BY THE CITY OF CONCORD, IF CONNECTION IS TO BE MADE TO AN EXISTING WATER MAIN, UNLESS SPECIFIED BY THE CITY.
2–INCH TAPPING SADDLE 2–INCH TAPPING SADDLES SHALL BE BRASS MANUFACTURED BY FORD "S–70", MUELLER "H–134–20", OR EQUAL. 6–INCH TO 12–INCH TAPPING SADDLE SHALL BE DOUBLE STRAP, STAINLESS STEEL, EPOXY OR NYLON COATED; OR SOLID BRASS MANUFACTURED BY SMITH BLAIR "313" OR ROMAC "202N". CORPORATION STOPS SHALL BE HIGH PRESSURE RATED AT 150 PSI BRASS COMPRESSION FITTING TYPE WITH STANDARD THREADS FOR INSERTION INTO THE TAPPING SADDLE AND WITH SERVICE PIPE CONNECTION INCLUDING COUPLING AND GASKET. CORPORATION STOPS MANUFACTURED BY MUELLER "H–25008", FORD, OR EQUIVALENT.
2. 2–INCH DIAMETER K–COPPER PIPE OR WITH CITY APPROVAL HDPE SDR9 200PSI RATED WITH TRACING WIRE AND WITH EITHER "FINALEN" ELECTROFUSION COUPLING FITTINGS "2"IPS–SDR9" OR 2"IPS X2"IPS BRASS WITH PROTECTIVE SLEEVES BY "INDEPENDENT PIPE PRODUCTS" AND 2" BRONZE 90–DEGREE ELBOWS, AS APPLICABLE.
3. GATE VALVE SHALL BE 2–INCH EPOXY COATED CAST IRON RESILIENT WEDGE FIP TO FIP CONNECTION MANUFACTURE AMERICAN FLOW CONTROL, MODEL "3045S", MUELLER, OR AN APPROVED EQUIVALENT.
4. STANDARD VALVE BOX PROTECTION WITH 2'–0" X 2'–0" CONCRETE PROTECTOR RING, CAST IRON IN ACCORDANCE WITH CITY OF CONCORD DETAILS.
5. 4 TO 6–INCHES OF WASHED STONE IN METER BOX BASE AND FOOTINGS.
6. 2–INCH BRASS METER VALVE FLANGE MANUFACTURED BY FORD "HFA13–777W" OR EQUAL.
7. THE 2–INCH AMP METER WITH 2 BOLTS FLANGED ENDS, MANUFACTURED BY MUELLER SYSTEMS, MODEL: MVR160; OR AN APPROVED EQUIVALENT SHALL BE SET AFTER THE APPURTENANCES REQUIRED FOR THE METER INSTALLATION ARE IN PLACE AND DEEMED ACCEPTABLE BY THE CITY OF CONCORD.
8. METER BOX SHALL BE GUASMASTERS UNDERGROUND ENCLOSURE, 17X30 STRAIGHT WALL –OPEN BOTTOM TIER 8 LOAD RATING BOX TIER WITH TWO MOUSE HOLES; AND SHALL HAVE A MINIMUM 12–INCH HEIGHT AND BE GRAY IN COLOR, MODEL NUMBER S1730125ZONG8–1; OR EQUIVALENT. ADDITIONAL BOX HEIGHT MUST BE AUTHORIZED BY THE CITY.
METER BOX LID SHALL BE GUASMASTERS UNDERGROUND ENCLOSURES, 17X30 COVER WITH SINGLE AMR MOUNTING HOLE, 2 THRU W/4.125 DIA X 0.25 DEPTH COUNTER BORE, WITH TIER 08 LOAD RATING AND GRAY IN COLOR, MODEL NUMBER S1730SN08–1–WAL OR EQUIVALENT. THE METER BOX RIM AND COVER SHALL BE SET FLUSH WITH FINAL GRADE. METER BOX ASSEMBLY SHALL NOT BE LOCATED WITHIN AREAS SUBJECT TO VEHICULAR AND PEDESTRIAN TRAFFIC AND/OR DRAINAGE FEATURES.
9. 12–INCH BRASS NIPPLE PAST BOX
10. REQUIRED BACKFLOW PREVENTION ASSEMBLY IN ACCORDANCE WITH THE CITY OF CONCORD CROSS–CONNECTION CONTROL ORDINANCE.

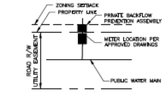


GENERAL LOCATION REQUIREMENT
N.T.S.
FINAL METER LOCATION TO BE IN COMPLIANCE WITH THE APPROVED DRAWINGS & CITY OF CONCORD ORDINANCE

Concord — WATER METER STANDARD DETAIL — 2–INCH COMMERCIAL WATER SERVICE METER

| No. | Date | By | REVISION |
|---|---|---|---|
| 2. | 4/26/17 | By: | GENERAL NOTE 2 – K–COPPER PIPE MATERIAL |
| 3. | 2/25/18 | By: | GENERAL NOTE 11–SCREED "W", SVM |
| 1. | 9/7/07 | By: | CONTINUOUS PIPE & CONNECTION, SVM |

| Drawn By: | Checked By: | Approved By: | Date | Sht | of |
|---|---|---|---|---|---|
| | | | 9/21 | | |

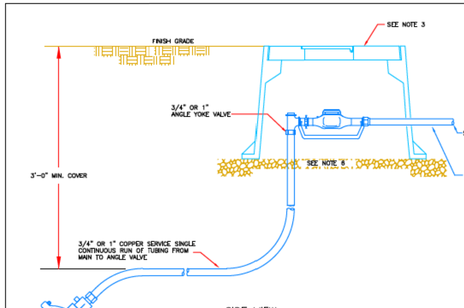


SIDE VIEW
NOT TO SCALE

GENERAL NOTES:
1. REFER TO THE CITY OF CONCORD SPECIFICATIONS FOR ACCEPTABLE MANUFACTURES OF MATERIALS.
2. PROVIDE 12" BRASS NIPPLE PAST BOX
3. METER BOXES SHALL BE PLASTIC BODY AND LID. THE METER HOUSING SHALL BE MID STATE PLASTICS OR EQUAL; 3/4–INCH BOX MSBCF – 1118–12XL AND LID MSCBC–1118– RTR; AND 1–INCH BOX MSBCF –1324–12XL AND LID MSCBC–1324– RTR. METER BOX RIM SHALL BE SET FLUSH WITH FINAL GRADE. THE WATER METER BOX ASSEMBLY SHALL NOT BE LOCATED WITHIN A ROAD, STREET, DRIVEWAY, SIDEWALK OR DRAINAGE FEATURE.
4. ALL APPURTENANCES FOR THE INSTALLATION OF THE WATER METER; THE METER, BRASS GROUND LOCKABLE METER CUTOFF, GASKETS, AND EXPANSION CONNECTION; SHALL BE INSTALLED BY THE CITY OF CONCORD, IF CONNECTION IS TO AN EXISTING MAIN.
5. REQUIRED BACKFLOW PREVENTION ASSEMBLY IN ACCORDANCE WITH THE CITY OF CONCORD CROSS–CONNECTION CONTROL ORDINANCE.
6. THE BASE OF THE METER BOX MUST HAVE AT LEAST 6–INCHES TO 8–INCHES OF #57 WASHED STONE.

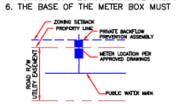


GENERAL LOCATION REQUIREMENT
N.T.S.
FINAL METER LOCATION TO BE IN COMPLIANCE WITH THE APPROVED DRAWINGS & CITY OF CONCORD ORDINANCE

Concord — WATER METER STANDARD DETAIL — 3/4–INCH AND 1–INCH IRRIGATION OR COMMERCIAL WATER SERVICE METER

| No. | Date | By | REVISION |
|---|---|---|---|
| 1. | 9/7/07 | By | CONTINUOUS PIPE & CONNECTION, SVM |

| Drawn By: | Checked By: | Approved By: | Date | Sht | of |
|---|---|---|---|---|---|
| | | | 02/05 | | |

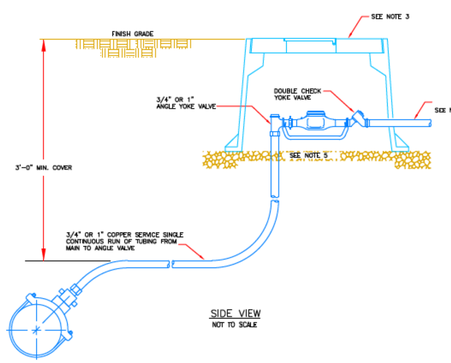


SIDE VIEW
NOT TO SCALE

GENERAL NOTES:
1. REFER TO THE CITY OF CONCORD SPECIFICATIONS FOR ACCEPTABLE MANUFACTURES OF MATERIALS.
2. PROVIDE 12" BRASS NIPPLE PAST BOX
3. THE METER HOUSING SHALL BE MID STATE PLASTICS OR EQUAL; 3/4–INCH BOX MSBCF – 1118–12XL AND LID MSCBC–1118– RTR; AND 1–INCH BOX MSBCF –1324–12XL AND LID MSCBC–1324– RTR. METER BOX RIM SHALL BE SET FLUSH WITH FINAL GRADE. THE WATER METER BOX ASSEMBLY SHALL NOT BE LOCATED WITHIN A ROAD, STREET, DRIVEWAY, SIDEWALK OR DRAINAGE FEATURE.
4. ALL APPURTENANCES FOR THE INSTALLATION OF THE WATER METER; THE METER, BRASS GROUND LOCKABLE METER CUTOFF, GASKETS, AND EXPANSION CONNECTION; SHALL BE INSTALLED BY THE CITY OF CONCORD, IF CONNECTION IS TO AN EXISTING MAIN.
5. THE BASE OF THE METER BOX MUST HAVE AT LEAST 6–INCHES TO 8–INCHES OF #57 WASHED STONE.

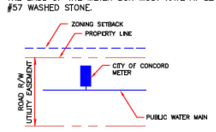


TYPICAL LOCATION REQUIREMENT
N.T.S.

Concord — WATER METER STANDARD DETAIL — 3/4–INCH AND 1–INCH RESIDENTIAL WATER SERVICE METER

| No. | Date | By | REVISION |
|---|---|---|---|
| 1. | 9/7/07 | By | CONTINUOUS PIPE & CONNECTION, SVM |

| Drawn By: | Checked By: | Approved By: | Date | Sht | of |
|---|---|---|---|---|---|
| | | | 02/05 | | |

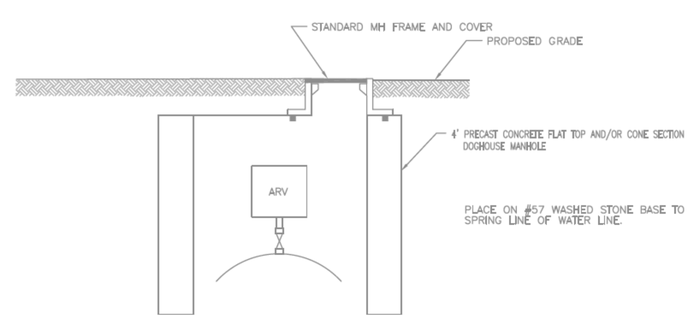


AIR–RELEASE VALVE DETAIL IN 4' PRECAST MANHOLE
NO SCALE

1. MANHOLE SHALL BE RATED FOR NCDOT SH–20 LOADING AND CONFORM TO ASTMC–478, LATEST REVISION.
2. ALL CONCRETE SHALL BE MINIMUM 4000 PSI COMPRESSIVE STRENGTH.
3. STEEL REINFORCING DESIGN SHALL CONFORM TO ASTM C857
4. REBARS SHALL BE GRADE 60 PER ASTM 185
5. DIAGONAL REINFORCING SHALL BE ADDED TO ALL OPENINGS.
6. VALVE TO LOCATED AT THE CENTER LINE OF MANHOLE.
7. FRAME TO BE FLUSH WITH THE GROUND IN MAINTAINED ROAD OR YARD R/W.
8. ALL JOINTS SHALL BE MADE WATERTIGHT USING 2 RINGS OF BUTYL RUBBER JOINT MASTIC
9. MAXIMUM HEIGHT OF GRADE ADJUSTMENT RINGS SHALL NOT EXCEED 12"
10. MANHOLE STEPS 15" O.C.

Concord — CITY OF CONCORD STANDARD DETAIL — TYPICAL AIR–RELEASE

| No. | Date | By | REVISION |
|---|---|---|---|

| Drawn By: | Checked By: | Approved By: | Date | Sht | of |
|---|---|---|---|---|---|
| SVM | MSH | MSH | 03/18 | 1 | 1 |

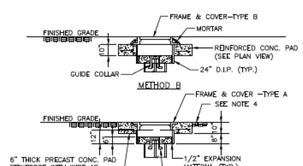


METHOD B




METHOD A

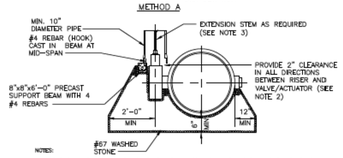


NOTES:
1. METHOD B SHALL BE USED IN PAVED AREAS AND METHOD A SHALL BE USED IN NONPAVED AREAS.
2. DIAMETER OF RISER MAY VARY AS REQUIRED BY VALVE ACTUATOR.
3. WHEN OPERATING NUT DEPTH EXCEEDS 4'–0" BELOW FINISHED GRADE, PROVIDE EXTENSION STEM WITH STD. 2" SQUARE OPERATING NUT IN TOP SECTION OF VALVE BOX. EXTENSION STEM SHALL BE SIZED AS RECOMMENDED BY THE VALVE MANUFACTURER.
4. PROVIDE PRECAST PROTECTOR RING IF IN SHOULDER OF ROAD.

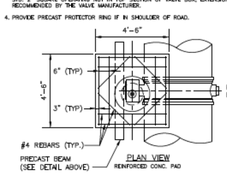


Concord — CITY OF CONCORD STANDARD DETAIL — DIRECT BURY BUTTERFLY VALVE INSTALLATION

| No. | Date | By | REVISION |
|---|---|---|---|

| Drawn By: | Checked By: | Approved By: | Date | Sht | of |
|---|---|---|---|---|---|
| | PK | MSH | 09/08 | | |

1/11/2023
R:\Utilities\Engineering\UC\Proj\Sheet\B-5808_ut_dtl_UC03B_psh.dgn
Adkinsn