DocuSign Envelope ID: 5391C456-74E9-442A-9E05-A5F2E510744D

pw:\\gfnet-pw.bentley.com:gfnet-pw-01\Documents\Projects\67945\5-Working\Task 010 - I-5955 Greensboro Rehab\Structures\CAD\2.0 100% Plans\407_005_I-5955_SMU_TS_003_400339
11/17/2022 9:55:00 AM pdf_color_gfclt_FS.plt I-5995.tbl

NOTES:

SEE TRAFFIC MANAGEMENT PLANS FOR LANE WIDTHS, SEQUENCING, AND OTHER TRAFFIC CONTROL MEASURES FOR STAGING OF OVERLAY SURFACE PREPARATION AND ASPHALT WEARING SURFACE (AWS) PLACEMENT.

SEE ROADWAY PLANS FOR MILLING AND OVERLAY OF THE BRIDGE DECK.

THE CONTRACTOR SHALL ENSURE THAT THE EXISTING DECK DRAINS ARE OPEN AND FULLY FUNCTIONAL AFTER PLACEMENT OF THE ASPHALT WEARING SURFACE.

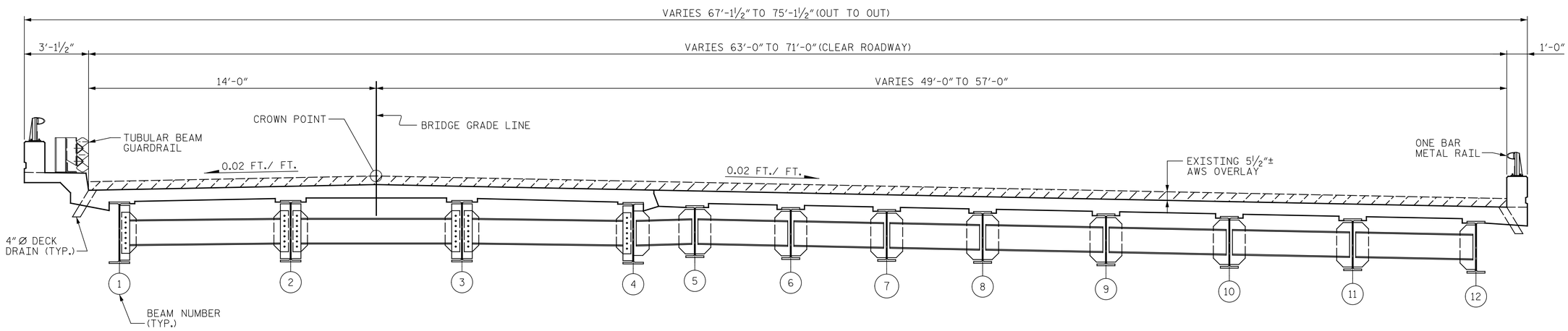

TYPICAL SECTION

(EXISTING)

PROJECT NO. I-5955

GUILFORD COUNTY

BRIDGE NO. 400339

DocuSigned by: John Yannaccone 7813617546784 56...
11/17/2022

NORTH CAROLINA PROFESSIONAL SEAL 032492 ENGINEER JOHN A. YANNACCONE

STATE OF NORTH CAROLINA
DEPARTMENT OF TRANSPORTATION
RALEIGH

TYPICAL SECTION AND SURFACE PREPARATION DETAILS

GANNETT FLEMING

One Glenwood Avenue
Suite 900
Raleigh, NC 27603
919-420-7660
NC Lic. No. F-0270

DOCUMENT NOT CONSIDERED FINAL UNLESS ALL SIGNATURES COMPLETED

REVISIONS								SHEET NO.
NO.	BY:	DATE:	NO.	BY:	DATE:			S7-3
1			3					TOTAL SHEETS
2			4					127

DRAWN BY : J. HARRIS DATE : 10/2022
CHECKED BY : J. YANNACCONE DATE : 10/2022