DocuSign Envelope ID: C75C0396-6076-4674-B824-73839B67BD31

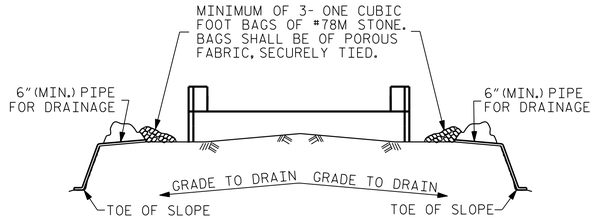

BAGGED STONE AND PIPE SHALL BE PLACED IMMEDIATELY AFTER COMPLETION OF END BENT EXCAVATION. PIPE MAY BE EITHER CONCRETE, CORRUGATED STEEL, CORRUGATED ALUMINUM ALLOY, OR CORRUGATED PLASTIC. PERFORATED PIPE WILL NOT BE ALLOWED.

BAGGED STONE SHALL REMAIN IN PLACE UNTIL THE ENGINEER DIRECTS THAT IT BE REMOVED. THE CONTRACTOR SHALL REMOVE AND DISPOSE OF SILT ACCUMULATIONS AT BAGGED STONE WHEN SO DIRECTED BY THE ENGINEER. BAGS SHALL BE REMOVED AND REPLACED WHENEVER THE ENGINEER DETERMINES THAT THEY HAVE DETERIORATED AND LOST THEIR EFFECTIVENESS.

NO SEPARATE PAYMENT WILL BE MADE FOR THIS WORK AND THE ENTIRE COST OF THIS WORK SHALL BE INCLUDED IN THE UNIT CONTRACT PRICE BID FOR THE SEVERAL PAY ITEMS.

TEMPORARY DRAINAGE AT END BENT

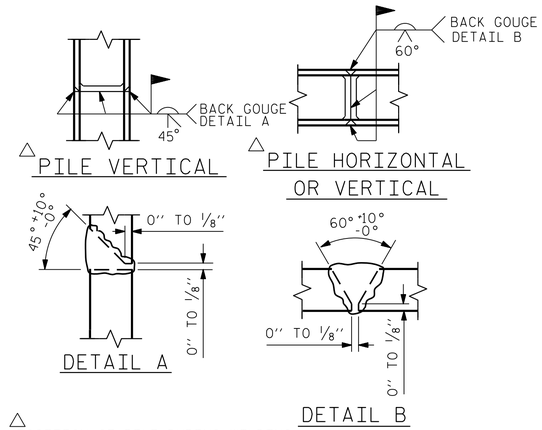

△ POSITION OF PILE DURING WELDING.

PILE SPLICE DETAILS

BAR TYPES

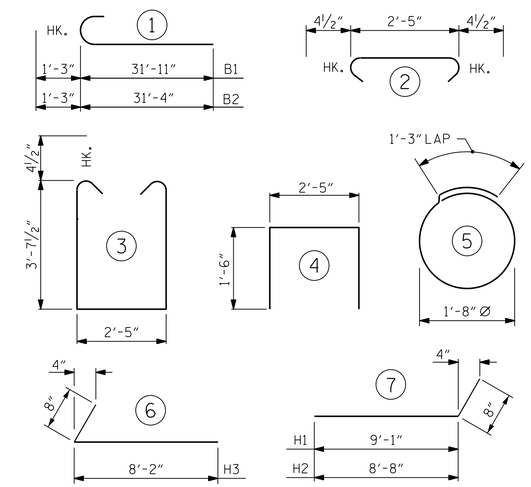

ALL BAR DIMENSIONS ARE OUT TO OUT.

BILL OF MATERIAL

FOR ONE END BENT

(2 REQUIRED)

BAR	NO.	SIZE	TYPE	LENGTH	WEIGHT
B1	8	#9	1	33'-2"	902
B2	8	#9	1	32'-7"	886
B3	42	#4	STR	21'-2"	594
B4	15	#4	STR	2'-5"	24
B5	4	#4	STR	25'-0"	67
H1	10	#4	7	9'-9"	65
H2	10	#4	7	9'-4"	62
H3	20	#4	6	8'-10"	118
K1	16	#4	STR	3'-8"	39
S1	100	#5	3	10'-5"	1086
S2	100	#5	2	3'-2"	330
S3	32	#4	5	6'-6"	139
U1	17	#4	4	5'-5"	62
V1	53	#4	STR	6'-5"	227

REINFORCING STEEL 4601 LBS.

CLASS A CONCRETE BREAKDOWN:

POUR #1	CAP, LOWER PART OF WINGS & COLLARS	29.6 C.Y.
POUR #2	UPPER PART OF WINGS	2.4 C.Y.
	TOTAL	32.0 C.Y.

END BENT 1	END BENT 2
HP 12 X 53 STEEL PILES	HP 12 X 53 STEEL PILES
NO: 8 LIN. FT.= 440	NO: 8 LIN. FT.= 400
PILE DRIVING EQUIP. SETUP FOR HP 12X53 PILES EA. 8	PILE DRIVING EQUIP. SETUP FOR HP 12X53 PILES EA. 8
PILE REDRIVES EA. 4	PILE REDRIVES EA. 4

7/8" Ø ANCHOR BOLTS	EA. 30
EMBEDDED WASHERS, NUTS & PLATES	EA. 30

FOR PAYMENT FOR ANCHOR BOLTS, NUTS, WASHERS AND PLATES, SEE NOTE ON SHEET S-07.

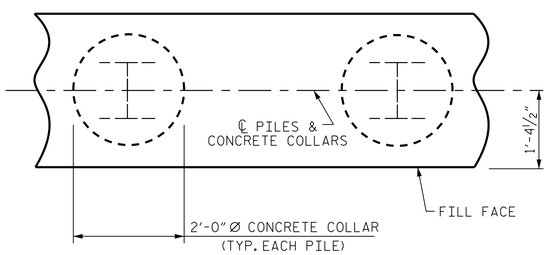

PLAN

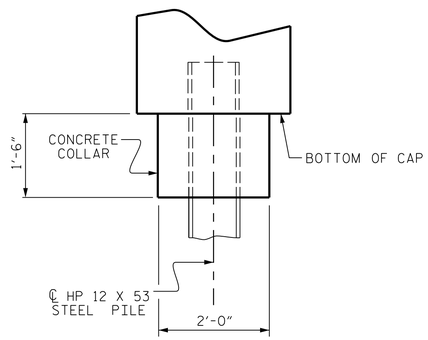

ELEVATION

CORROSION PROTECTION FOR STEEL PILES DETAIL

(END BENT 1 SHOWN, END BENT 2 SIMILAR BY ROTATION)

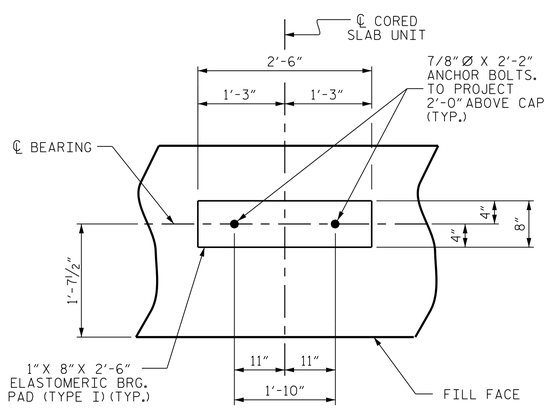

DETAIL "A"

(END BENT 1 SHOWN, END BENT 2 SIMILAR BY ROTATION)

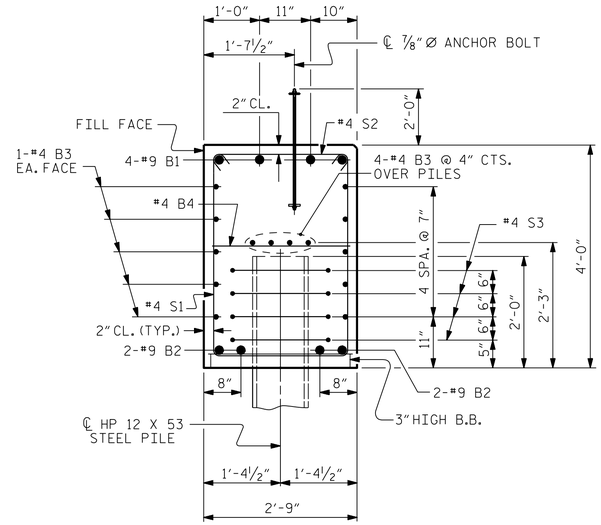

SECTION A-A

(CONCRETE COLLAR NOT SHOWN FOR CLARITY. SEE "CORROSION PROTECTION FOR STEEL PILES DETAIL.")

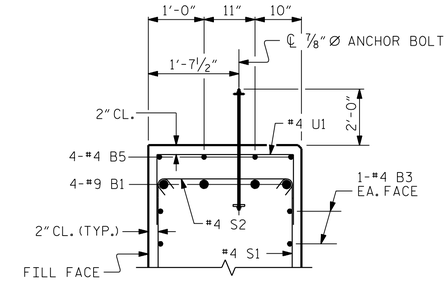

PARTIAL SECTION B-B

PROJECT NO. B-5644

PENDER COUNTY

STATION: 15+55.00 -L-

SHEET 4 OF 4

DOCUMENT NOT CONSIDERED FINAL UNLESS ALL SIGNATURES COMPLETED

CDM Smith
CDM SMITH
5400 Glenwood Avenue, Suite 400
Raleigh, NC 27612-3228
NC COA No. F-1255

DRAWN BY : VDK DATE : 5/19
CHECKED BY : THF DATE : 4/20
DESIGN ENGINEER : VDK DATE : 5/20

DWG. No.

NORTH CAROLINA PROFESSIONAL SEAL 16301 ENGINEER TING-HSIUNG FANG
Ting-Hsiung Fang
6BEA5C8AEA5D482...
4/29/2021

STATE OF NORTH CAROLINA
DEPARTMENT OF TRANSPORTATION
RALEIGH

SUBSTRUCTURE

END BENTS 1 & 2 DETAILS

REVISIONS						SHEET NO.
NO.	BY:	DATE:	NO.	BY:	DATE:	S-17
1			3			TOTAL SHEETS
2			4			19

FILE: SPILES
DATE: SDATES
STIMES