DocuSign Envelope ID: 68E9BB26-6B0E-40B6-BDEF-B2B1AD9A425F

CDM Smith
CDM Smith Inc.
5400 Glenwood Avenue
Suite 400
Raleigh, NC 27612-3228
NC COA No. F-1255

TIP NO.	SHEET NO.
B-5644	PMP-4

APPROVED: DocuSigned by: Adam M. Conrad 0DDC0FFADFD94AD...

DATE: 3/9/2022

SEAL

NORTH CAROLINA PROFESSIONAL SEAL 043767 ENGINEER ADAM M. CONRAD

DOCUMENT NOT CONSIDERED FINAL UNLESS ALL SIGNATURES COMPLETED

PAVEMENT MARKING SCHEDULE

SYMBOL	DESCRIPTION
THERMO(4", 90 MILS)	
T1	WHITE EDGELINE
T5	2'-6' WHITE MINI SKIP
T13	YELLOW DOUBLE CENTER
THERMO(24", 90 MILS)	
T61	WHITE STOPBAR

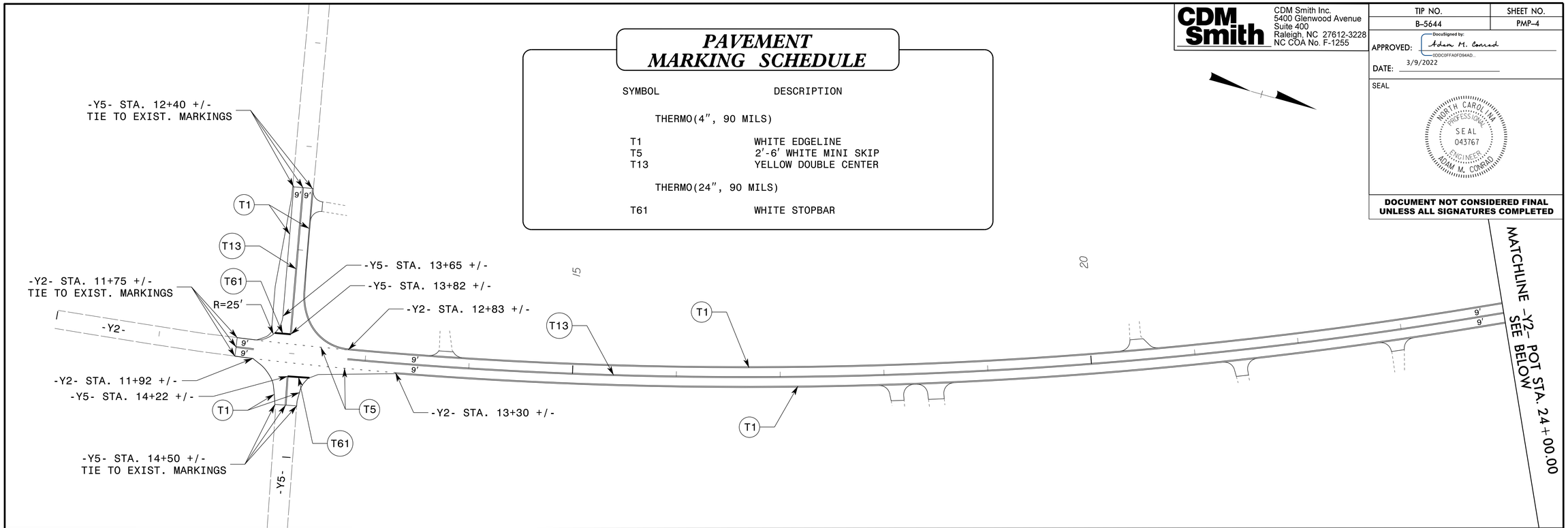

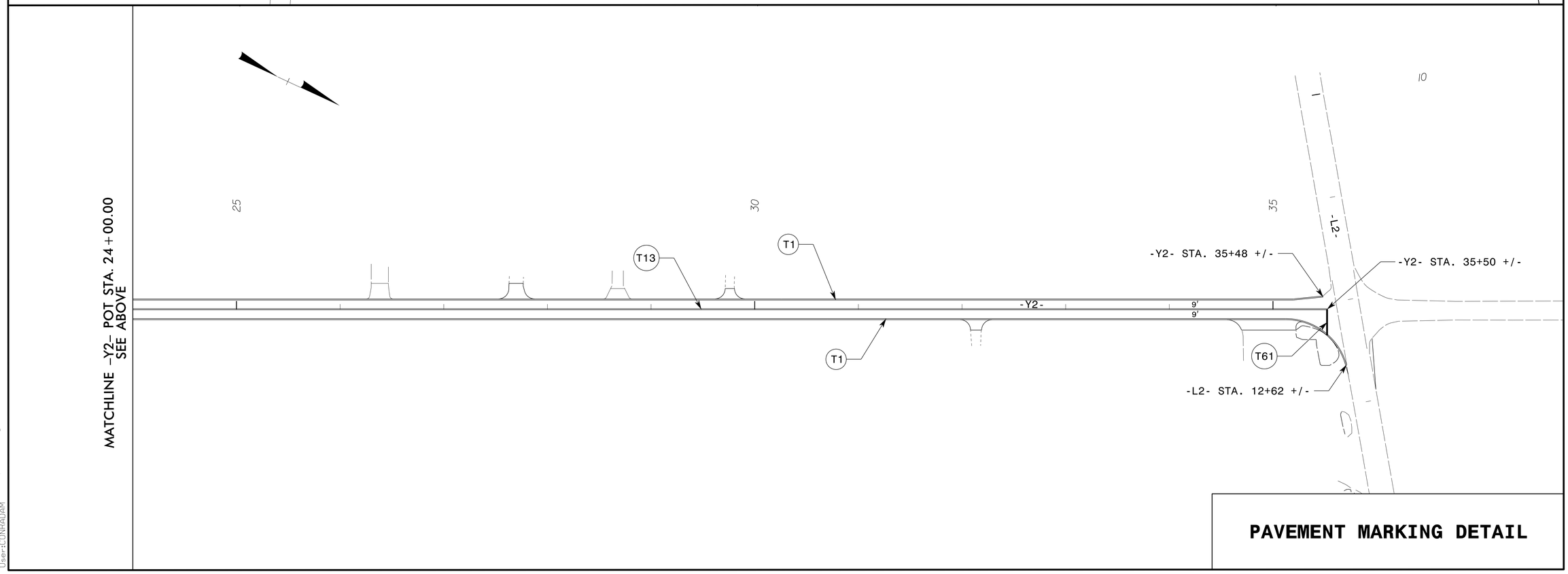

PAVEMENT MARKING DETAIL

2/2/2022
cdmsmith-az02-pw.bentley.com:PW_PL1\Documents\117240\235078\10 Transportation\04 Client Folder Structure\B-5644\Traffic\Signing\CADD\B5644_TMP_PM04.dgn
User:CONRADAM