DocuSign Envelope ID: 741FFDCE-58F5-44D1-8FE8-1A85F1B267A0

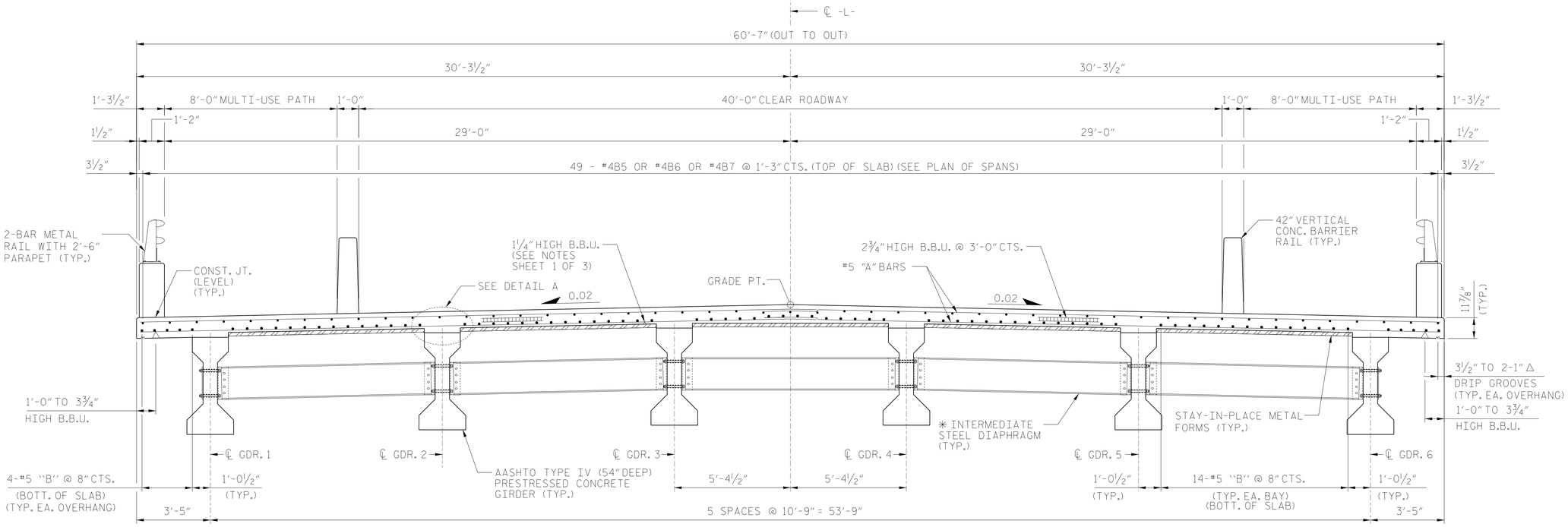

TYPICAL SECTION AT INTERMEDIATE DIAPHRAGM

✱ FOR INTERMEDIATE STEEL DIAPHRAGM DETAILS, SEE "INTERMEDIATE STEEL DIAPHRAGMS FOR TYPE IV PRESTRESSED CONCRETE GIRDERS" SHEET.

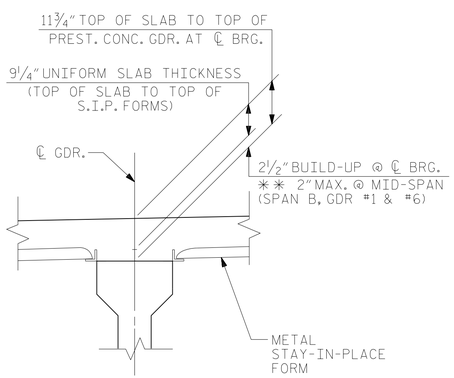

DETAIL A

✱✱ BASED ON PREDICTED FINAL CAMBER AND THEORETICAL GRADE LINE ELEVATIONS.

PROJECT NO. B-5318

WAKE COUNTY

STATION: 19+73.00 -L-

SHEET 2 OF 3

Dewberry
2610 WYCLIFF ROAD
SUITE 410
RALEIGH, NC 27607
PHONE: 919.881.9939
NC COA No. F-0929

NORTH CAROLINA PROFESSIONAL SEAL 046785 ENGINEER ZACHARY BROWN

DocuSigned by: Zachary Brown 431B0B6B0C34BA...

9/16/2022

DOCUMENT NOT CONSIDERED FINAL UNLESS ALL SIGNATURES COMPLETED

STATE OF NORTH CAROLINA
DEPARTMENT OF TRANSPORTATION
RALEIGH

SUPERSTRUCTURE

TYPICAL SECTION

REVISIONS						SHEET NO.
NO.	BY:	DATE:	NO.	BY:	DATE:	S-7
1			3			TOTAL SHEETS
2			4			41

DRAWN BY : E. JONES DATE : JUNE 21
CHECKED BY : P. O'NEILL DATE : JUNE 21
DESIGN ENGINEER OF RECORD: Z. BROWN DATE : JUNE 21

9/16/2022
P:\50084265\50084274 B5318 PH2\CAD\Civil\B5318\Structures\PLANS\FinalPlans\401_013_B5318_SMU_TS02_007_910126.dgn
$USER$