DocuSign Envelope ID: CF96CF03-60C0-4F8F-A1BD-C2A4B34F8A9D

PROJECT REFERENCE NO.	SHEET NO.
B-5318	2C-5

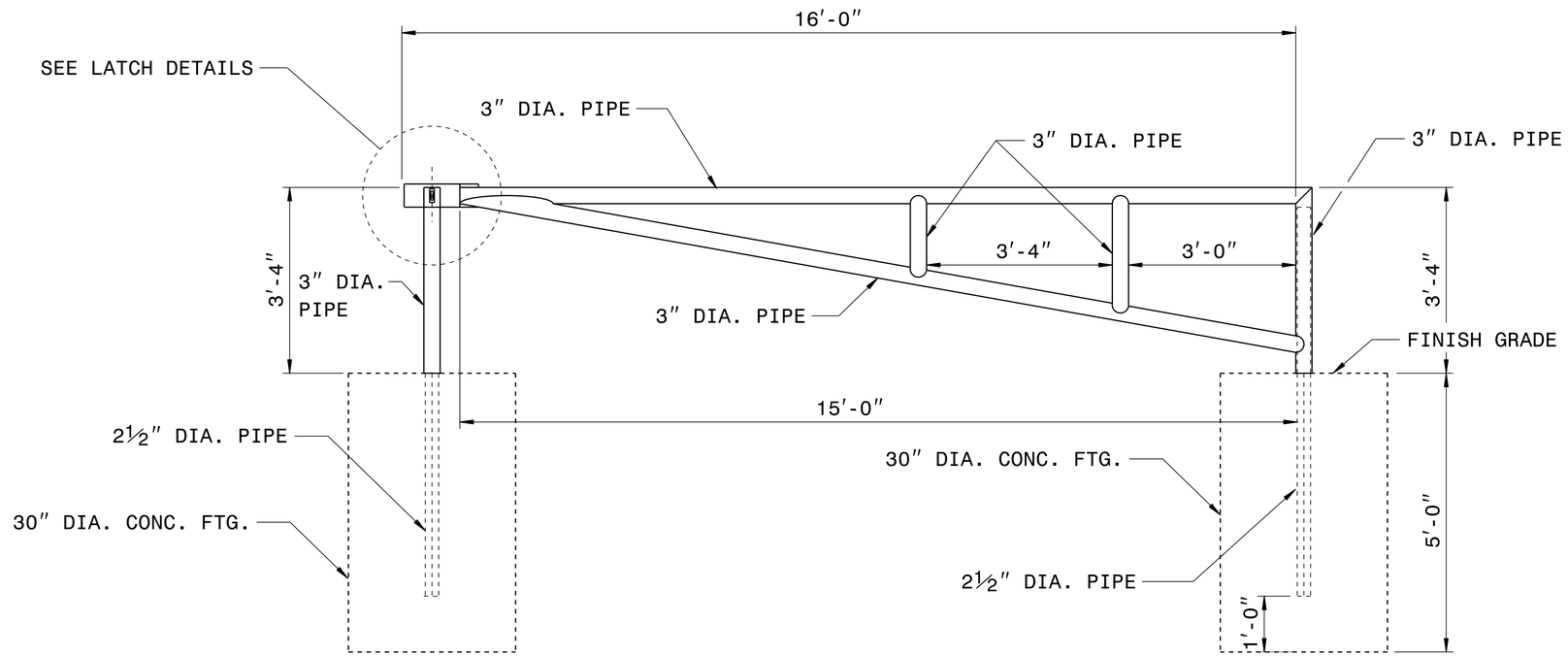

ELEVATION VIEW

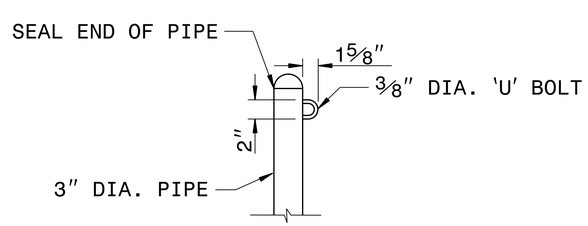

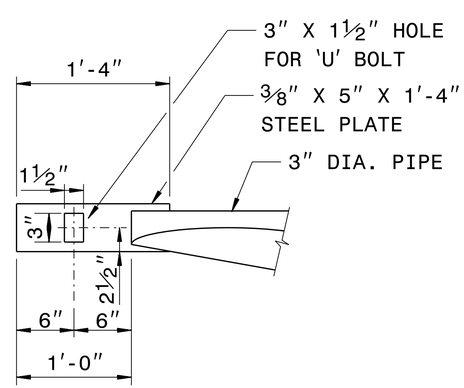

LATCH DETAILS

GENERAL NOTES:
1- ALL STEEL SHALL BE ASTM A36 STEEL.
2-¼″ FILLET WELDS ON ALL CONNECTIONS.
3-CONCRETE SHALL BE MINIMUM CLASS ′B′.
4-GATE SHALL BE LOCATED AS DIRECTED BY THE ENGINEER.
5-ALL PIPE SIZES ARE O.D.
6-LUBRICATE 2½″ DIA. PIPE BEFORE INSTALLING GATE TO INSURE SMOOTH OPERATION.
7-GATE SHALL BE PAID FOR PER EACH INSTALLATION.

DOCUMENT NOT CONSIDERED FINAL UNLESS ALL SIGNATURES COMPLETED

CONTRACT STANDARDS & DEVELOPMENT UNIT
STANDARDS AND SPECIAL DESIGN
Office 919-707-6950 FAX 919-250-4119

DETAIL OF STEEL PIPE GATE

ORIGINAL BY: DATE:
MODIFIED BY: rnbritt DATE: 09-08-05
CHECKED BY: DATE:
FILE SPEC.: details/nbritt/misc/steelpipegate.dgn

09-MAY-2019 14:43
S:\Contracts\Special Details\nbritt\english\misc\steel pipe gate.dgn
jhowerton AT CSD-292595