DocuSign Envelope ID: 59BC7253-2EC9-4271-B7B7-51418CBCBBDB

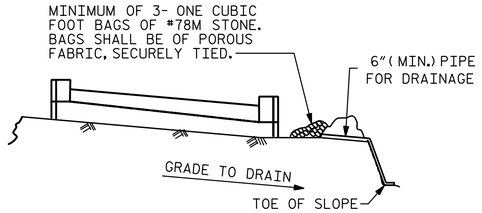

BAGGED STONE AND PIPE SHALL BE PLACED IMMEDIATELY AFTER COMPLETION OF END BENT EXCAVATION. PIPE MAY BE EITHER CONCRETE, CORRUGATED STEEL, CORRUGATED ALUMINUM ALLOY, OR CORRUGATED PLASTIC. PERFORATED PIPE WILL NOT BE ALLOWED.

BAGGED STONE SHALL REMAIN IN PLACE UNTIL THE ENGINEER DIRECTS THAT IT BE REMOVED. THE CONTRACTOR SHALL REMOVE AND DISPOSE OF SILT ACCUMULATIONS AT BAGGED STONE WHEN SO DIRECTED BY THE ENGINEER. BAGS SHALL BE REMOVED AND REPLACED WHENEVER THE ENGINEER DETERMINES THAT THEY HAVE DETERIORATED AND LOST THEIR EFFECTIVENESS.

NO SEPERATE PAYMENT WILL BE MADE FOR THIS WORK AND THE ENTIRE COST OF THIS WORK SHALL BE INCLUDED IN THE UNIT CONTRACT PRICE BID FOR THE SEVERAL PAY ITEMS.

TEMPORARY DRAINAGE AT END BENT

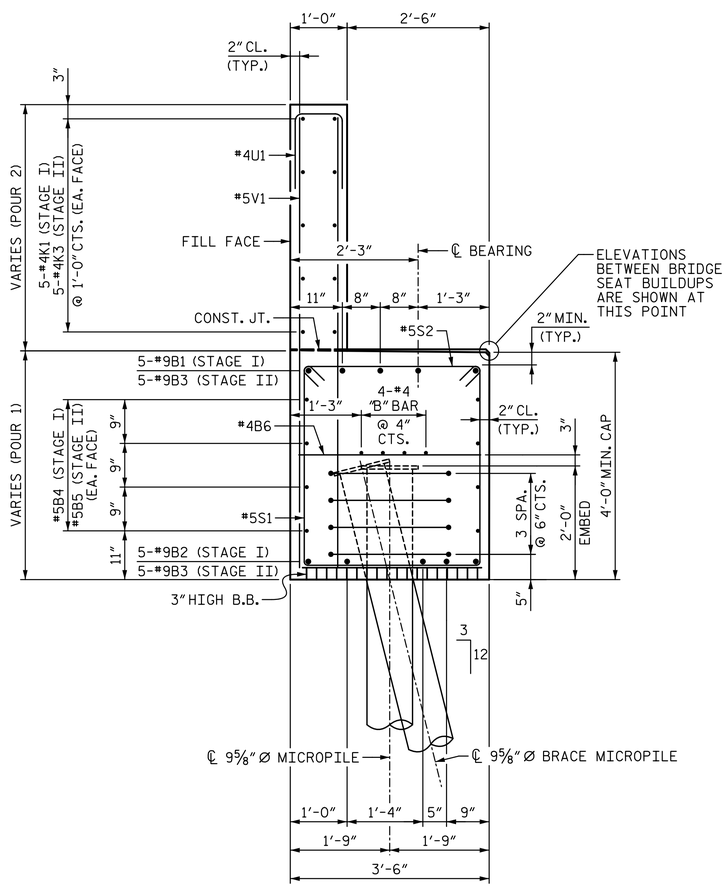

SECTION A-A

BAR TYPES

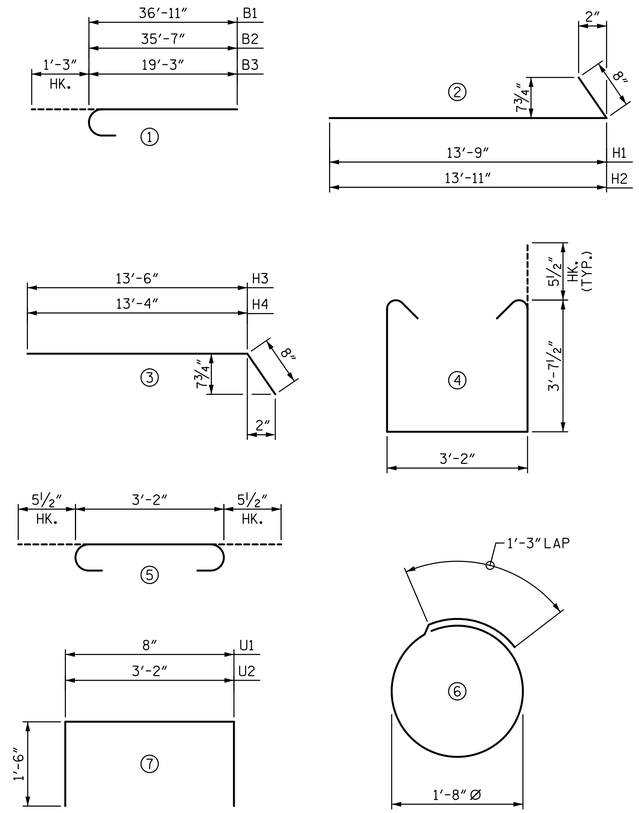

ALL BAR DIMENSIONS ARE OUT TO OUT.

BILL OF REINFORCING

END BENT 2 - STAGE I

BAR	NO.	SIZE	TYPE	LENGTH	WEIGHT
B1	5	#9	1	38'-2"	649
B2	5	#9	1	36'-11"	628
B4	8	#5	STR.	34'-7"	289
B6	8	#4	STR.	3'-2"	17
B7	4	#4	STR.	34'-7"	92
B9	5	#4	STR.	22'-8"	76
B10	5	#4	STR.	3'-5"	11
H1	21	#6	2	14'-5"	455
H2	21	#6	2	14'-7"	460
K1	10	#4	STR.	33'-11"	227
K2	6	#4	STR.	2'-8"	11
S1	42	#5	4	11'-4"	496
S2	42	#5	5	4'-1"	179
S3	16	#4	6	6'-6"	70
U1	28	#4	7	3'-8"	69
U2	23	#4	7	6'-2"	95
V1	56	#5	STR.	8'-0"	467
V2	20	#5	STR.	10'-1"	210
V3	14	#5	STR.	10'-4"	151

END BENT 2 - STAGE II

BAR	NO.	SIZE	TYPE	LENGTH	WEIGHT
B3	10	#9	1	20'-6"	697
B5	8	#5	STR.	19'-3"	161
B6	5	#4	STR.	3'-2"	11
B8	4	#4	STR.	19'-3"	51
H3	20	#6	3	14'-2"	426
H4	20	#6	3	14'-0"	421
K2	6	#4	STR.	2'-8"	11
K3	10	#4	STR.	19'-3"	129
S1	27	#5	4	11'-4"	319
S2	27	#5	5	4'-1"	115
S3	8	#4	6	6'-6"	34
U1	18	#4	7	3'-8"	44
V1	36	#5	STR.	8'-0"	300
V4	20	#5	STR.	9'-8"	202
V5	14	#5	STR.	9'-10"	144

QUANTITIES

		STAGE I	STAGE II
REINFORCING STEEL	LBS	4,652	3,065
CLASS A CONCRETE:			
POUR 1 - CAP	C.Y.	19.8	12.4
POUR 2 - BACKWALL, WINGS	C.Y.	8.5	6.6
TOTAL CLASS A CONCRETE:	C.Y.	28.3	19.0

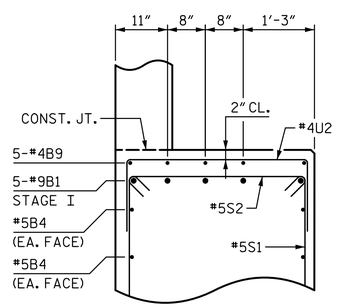

PARTIAL SECTION B-B

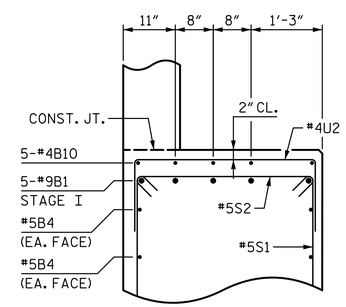

PARTIAL SECTION C-C

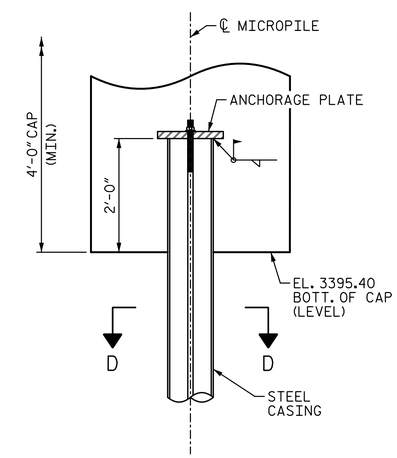

MICROPILE DETAIL

(TYP. EACH MICROPILE)

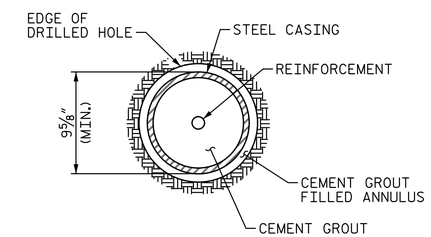

SECTION D-D

PROJECT NO. BR-0029

MACON COUNTY

STATION: 15+52.07 -L-

SHEET 4 OF 4

STATE OF NORTH CAROLINA
DEPARTMENT OF TRANSPORTATION
RALEIGH

SUBSTRUCTURE
END BENT 2
DETAILS

DRAWN BY : L. YARBROUGH DATE : 10-2021
CHECKED BY : V. WU DATE : 10-2021
DESIGN ENGINEER OF RECORD: VINCENT M. WU DATE : 10-2021

DOCUMENT NOT CONSIDERED FINAL UNLESS ALL SIGNATURES COMPLETED

DRMP
4235 SOUTH STREAM BLVD.
SUITE 150,
CHARLOTTE, NC 28217
(704) 332-2289
NC LICENSE NO. C-2213

NORTH CAROLINA PROFESSIONAL SEAL 042884 ENGINEER VINCENT M. WU
DocuSigned by: 2/14/2022

REVISIONS							SHEET NO.
NO.	BY:	DATE:	NO.	BY:	DATE:		S-30
1			3				TOTAL SHEETS
2			4				33