DocuSign Envelope ID: 645207D1-4A50-4E02-87C5-D144E22CF1E7

5/14/99

PROJECT REFERENCE NO.	SHEET NO.
Y-4810K	2A-2
R/W SHEET NO.	

ROADWAY DESIGN ENGINEER
NORTH CAROLINA PROFESSIONAL SEAL 27391 ENGINEER MICHAEL PEA MARK
DocuSign Envelope ID: Michael Pea Mark 2/3/2021
DIGITAL SIGNATURE
MOTT MACDONALD I & E, LLC
LICENSE NO. F-0669

PAVEMENT DESIGN ENGINEER
NORTH CAROLINA PROFESSIONAL SEAL 022896 ENGINEER CLARK S. MORRISON
DocuSign Envelope ID: Clark S. Morrison 2/3/2021
DIGITAL SIGNATURE

DOCUMENT NOT CONSIDERED FINAL UNLESS ALL SIGNATURES COMPLETED

Prepared in the Office of:
MOTT MACDONALD
7621 Parfay Road; Suite 115
Fuquay-Varina, NC 27526
www.mottmac.com/north-america

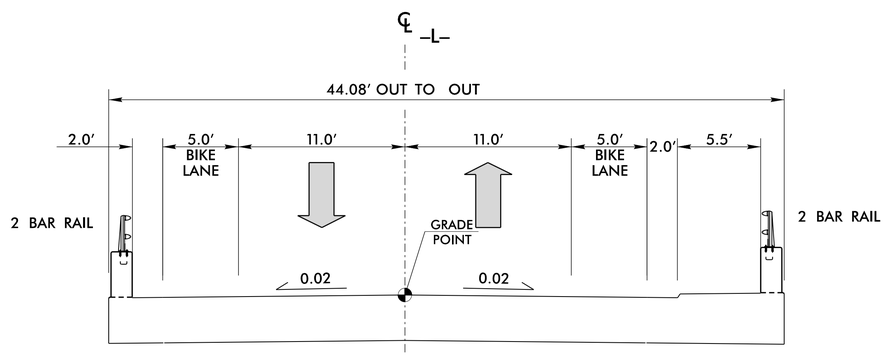

BRIDGE TYPICAL SECTION

USE BRIDGE TYPICAL SECTION:
–L– STA 30+23.11 TO 35+01.11

NOTE: SEE STRUCTURE PLANS FOR FENCE LOCATION ALONG THE BRIDGE

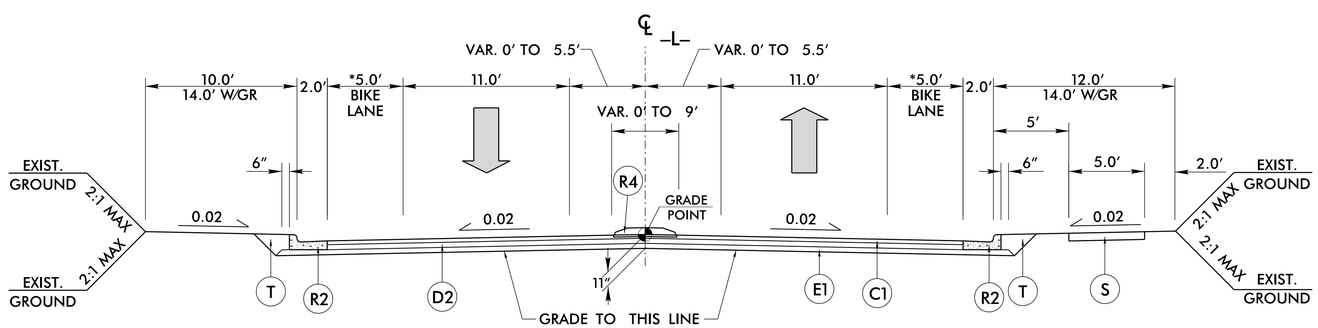

TYPICAL SECTION NO. 2

USE TYPICAL SECTION NO. 2:
–L– STA 15+50.00 TO 20+87.67
–L– STA 22+07.67 TO 30+23.11 (BEG. BRIDGE)
–L– STA 35+01.11 (END BRIDGE) TO 42+00.00

*BEG/END BIKE LANES:
END BIKE LANES –L– STA 19+28.00
BEG BIKE LANES –L– STA 23+67.00

NOTES:
–SEE PLANS FOR LOCATION OF TURN LANES AND TAPERS
–SEE PLANS FOR INTERSECTION TURNOUTS
–SEE PLANS FOR LOCATION OF ISLANDS

A1	7″ CONCRETE PAVEMENT
C1	3″ S9.5B
C2	VAR. DEPTH S9.5B
D1	2.5″ I19.0C
D2	4″ I19.0C
D3	VAR. DEPTH I19.0C
E1	4″ B25.0C
E2	VAR. DEPTH B25.0C
J	6″ ABC
R1	1′–6″ CURB AND GUTTER
R2	2′–6″ CURB AND GUTTER
R3	9″X18″ CURB
R4	5″ MON. CONC. IS. (KEY. IN)
R5	EXPRESSWAY GUTTER
S	4″ SIDEWALK
T	EARTH MATERIAL
U	EXISTING PAVEMENT
W1	VAR. DEPTH ASPH. PAVE.
W2	VAR. DEPTH ASPH. PAVE.
V1	INCIDENTAL MILLING
V2	2.5″ MILLING

NOTE: PAVEMENT EDGE SLOPES ARE 1:1 UNLESS SHOWN OTHERWISE.

4:22:32 PM
R:\Roadway\Proj\Y4810K_rdy_typ.dgn
pfpeters