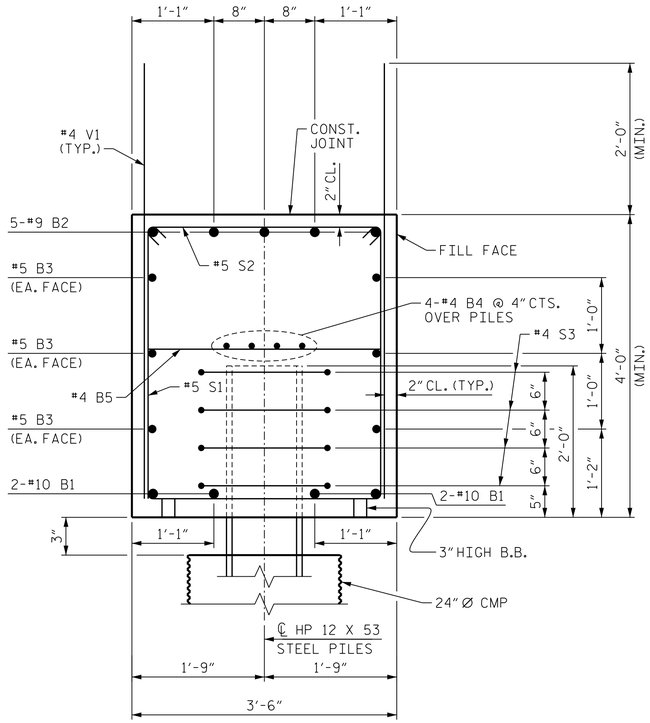


SECTION A-A

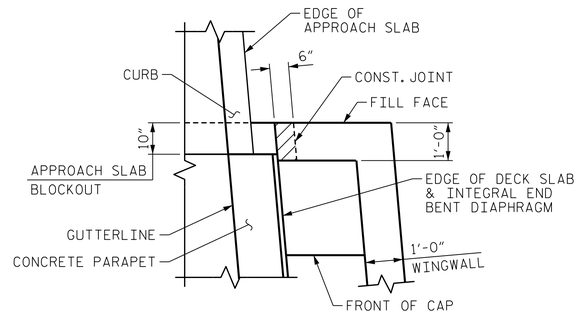


PLAN

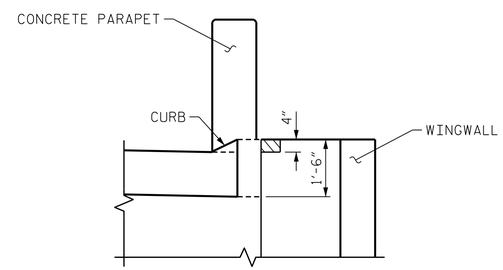


ELEVATION

## WINGWALL BLOCKOUT

THE CONCRETE IN THE SHADED AREA SHALL BE POURED AFTER THE JOINT BETWEEN THE DECK AND APPROACH SLAB HAS BEEN SAWED AND THE CONCRETE PARAPET IS CAST IF SLIP FORMING IS USED.

## BAR TYPES

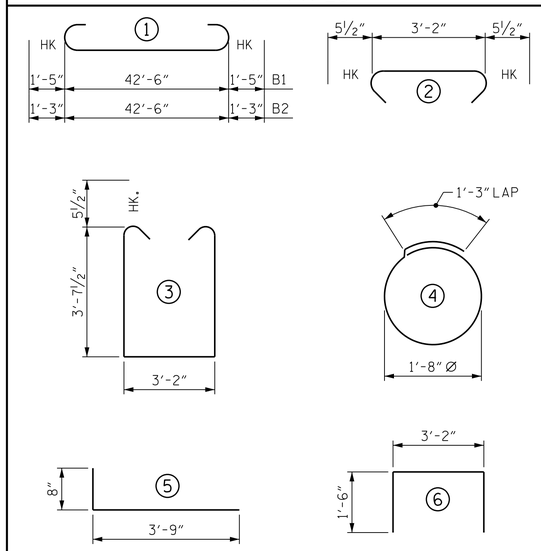


ALL BAR DIMENSIONS ARE OUT TO OUT.

## BILL OF MATERIAL

### END BENT 2

| BAR | NO. | SIZE | TYPE | LENGTH | WEIGHT |
|---|---|---|---|---|---|
| B1 | 4 | #10 | 1 | 45'-4" | 780 |
| B2 | 5 | #9 | 1 | 45'-0" | 765 |
| B3 | 6 | #5 | STR | 42'-6" | 266 |
| B4 | 8 | #4 | STR | 22'-6" | 120 |
| B5 | 11 | #4 | STR | 3'-2" | 23 |
| B6 | 5 | #4 | STR | 2'-8" | 9 |
| | | | | | |
| H1 | 44 | #4 | 5 | 4'-5" | 130 |
| H2 | 44 | #4 | STR | 4'-6" | 132 |
| | | | | | |
| K1 | 12 | #4 | STR | 2'-5" | 19 |
| K2 | 12 | #4 | STR | 3'-0" | 24 |
| | | | | | |
| S1 | 41 | #5 | 3 | 11'-4" | 485 |
| S2 | 41 | #5 | 2 | 4'-1" | 175 |
| S3 | 24 | #4 | 4 | 6'-6" | 104 |
| | | | | | |
| U1 | 3 | #4 | 6 | 6'-2" | 12 |
| | | | | | |
| V1 | 60 | #4 | STR | 6'-0" | 240 |
| V2 | 18 | #4 | STR | 9'-5" | 113 |
| V3 | 20 | #4 | STR | 9'-6" | 127 |
| | | | | | |
| REINFORCING STEEL | | | | | 3,524 LBS. |

| CLASS A CONCRETE BREAKDOWN | |
|---|---|
| POUR #1 (CAP & LOWER PART OF WINGS) | 23.5 C.Y. |
| POUR #2 (UPPER PART OF WINGS) | 3.6 C.Y. |
| TOTAL | 27.1 C.Y. |

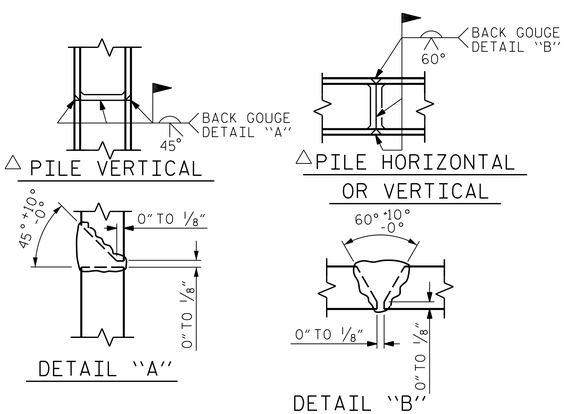


△POSITION OF PILE DURING WELDING.

## PILE SPLICE DETAILS

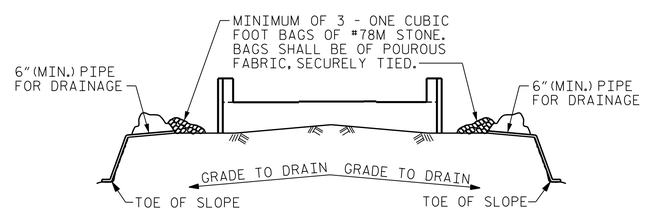


BAGGED STONE AND PIPE SHALL BE PLACED IMMEDIATELY AFTER COMPLETION OF END BENT EXCAVATION. PIPE MAY BE EITHER CONCRETE, CORRUGATED STEEL, CORRUGATED ALUMINUM ALLOY, OR CORRUGATED PLASTIC. PERFORATED PIPE WILL NOT BE ALLOWED.

BAGGED STONE SHALL REMAIN IN PLACE UNTIL THE ENGINEER DIRECTS THAT IT BE REMOVED. THE CONTRACTOR SHALL REMOVE AND DISPOSE OF SILT ACCUMULATIONS AT BAGGED STONE WHEN SO DIRECTED BY THE ENGINEER. BAGS SHALL BE REMOVED AND REPLACED WHENEVER THE ENGINEER DETERMINES THAT THEY HAVE DETERIORATED AND LOST THEIR EFFECTIVENESS.

NO SEPARATE PAYMENT WILL BE MADE FOR THIS WORK AND THE ENTIRE COST OF THIS WORK SHALL BE INCLUDED IN THE UNIT CONTRACT PRICE BID FOR THE SEVERAL PAY ITEMS.

## TEMPORARY DRAINAGE AT END BENT

PROJECT NO. I-5987A
ROBESON COUNTY
STATION: 29+75.79 -Y2-

SHEET 3 OF 3

NORTH CAROLINA PROFESSIONAL SEAL 027799 ENGINEER ALLYSON K. ORR
3/22/2022

**DOCUMENT NOT CONSIDERED FINAL UNLESS ALL SIGNATURES COMPLETED**


MI ENGINEERING
1011 SCHAUB DRIVE, SUITE 100
RALEIGH, NC 27606
(919) 851-6606
FIRM PE NUMBER : P-0671


STATE OF NORTH CAROLINA
DEPARTMENT OF TRANSPORTATION
RALEIGH

SUBSTRUCTURE

# END BENT 2 DETAILS AND BILL OF MATERIAL

| REVISIONS | | | | | | | | SHEET NO. |
|---|---|---|---|---|---|---|---|---|
| NO. | BY: | DATE: | NO. | BY: | DATE: | | | S1-33 |
| 1 | | | 3 | | | | | TOTAL SHEETS |
| 2 | | | 4 | | | | | 36 |

| | | | |
|---|---|---|---|
| DRAWN BY : | B.E. LANNING | DATE : | 06/2021 |
| CHECKED BY : | A.K. ORR | DATE : | 07/2021 |
| DESIGN ENGINEER OF RECORD : | A.K. ORR | DATE : | 03/2022 |

3/22/2022
1:15:45 PM
User: blanning
Filename: N:\NC Bridges\M20003 I-5987A&B I-95\I5987A\Structures\401_065_I5987A_SMU_E2C_T70151.dgn