This electronic collection of documents is provided for the convenience of the user and is Not a Certified Document –

The documents contained herein were originally issued and sealed by the individuals whose names and license numbers appear on each page, on the dates appearing with their signature on that page.
This file or an individual page shall not be considered a certified document.

DocuSign Envelope ID: 8FFAE061-8EE1-4FF9-93AD-8702A54A0DFA

PROJECT REFERENCE NO.	SHEET NO.
R-3830	Sig. 17.5

ALTERNATE PHASING ACTIVATION DETAIL

TO RUN ALT. PHASING DURING COORDINATION - SELECT ALL PAGE CHANGES (AS SHOWN BELOW) WITHIN COORDINATION PLAN PROGRAMMING.

TO RUN ALT. PHASING DURING FREE RUN - PROGRAM PAGE CHANGES (SHOWN BELOW) IN SEPARATE TIME OF DAY EVENTS. IF PAGE 1 IS USED, NO EVENT PROGRAMMING IS NECESSARY FOR THAT PARTICULAR PAGE.

PHASING	INPUTS PAGE	OVERLAPS PAGE
ACTIVE PAGES REQUIRED TO RUN DEFAULT PHASING	1	1
ACTIVE PAGES REQUIRED TO RUN ALTERNATE PHASING	2	2

NOTE: PAGES NOT SHOWN (i.e. sequence, phase control, etc.) SHOULD REMAIN AS '1', OR AS DEFINED BY TIMING ENGINEER.

IMPORTANT: IF ALT. PHASING IS USED DURING FREE RUN AND COORDINATION, DO NOT OPERATE TIME OF DAY PAGE CHANGE EVENTS CONCURRENTLY WITH COORDINATION PLAN EVENTS IN THE EVENT SCHEDULER. (EX. FREE RUN PAGE CHANGE EVENT SHOULD END BEFORE COORDINATION PLAN EVENT STARTS AND VICE-VERSA).

ALTERNATE PHASING PAGE CHANGE SUMMARY

THE FOLLOWING IS A SUMMARY OF WHAT TAKES PLACE WHEN THESE OVERLAP/INPUT PAGE CHANGES ACTIVATE TO CALL THE "ALTERNATE PHASING":

OVERLAPS PAGE 2: Modifies overlap parent phases for heads 11 and 51 to run protected turns only.

INPUTS PAGE 2: Disables phase 6 call on loop 1A and reduces delay time for phase 1 call on loop 1A to 0 seconds.

Disables phase 2 call on loop 5A and reduces delay time for phase 5 call on loop 5A to 0 seconds.

THIS ELECTRICAL DETAIL IS FOR THE SIGNAL DESIGN: 08-1065
DESIGNED: JANUARY 2020
SEALED: 11-05-2019
REVISED:

Final Design
Electrical Detail - Sheet 5 of 5

DOCUMENT NOT CONSIDERED FINAL UNLESS ALL SIGNATURES COMPLETED

Stantec
Stantec Consulting Services Inc.
801 Jones Franklin Road-Suite 300
Raleigh, NC 27606
Tel. (919) 851-6866
Fax. (919) 851-7024
www.stantec.com
License No. F-0672

ELECTRICAL AND PROGRAMMING DETAILS FOR:

Prepared for the Offices of:
Mobility and Safety Division
STATE OF NORTH CAROLINA
DEPARTMENT OF TRANSPORTATION
Signals Management Section
750 N.Greenfield Pkwy,Garner,NC 27529

NC 42 (Broadway Road)
at
US 421/NC 87 Northbound Ramps/
Coty Plant Entrance

Division 8 Lee County Sanford

PLAN DATE:	JANUARY 2020	REVIEWED BY:	E D Harris
PREPARED BY:	R M Muncey	REVIEWED BY:	-

REVISIONS	INIT.	DATE

SEAL
NORTH CAROLINA PROFESSIONAL SEAL 43239 ENGINEER REGINA M. MUNCEY

DocuSigned by:
Regina M. Muncey 1/7/2020
SIGNATURE DATE

SIG. INVENTORY NO. 08-1065

1:39:15 PM
U:\Traffic\Signals\Design\Electrical Details\Final Design\R-3830_sm_ele_08-1065.dgn
User:rmuncey

METAL POLE No. 12

PROJECT REFERENCE NO.	SHEET NO.
R-3830	SIG-17.6

Design Loading for METAL POLE NO. 12

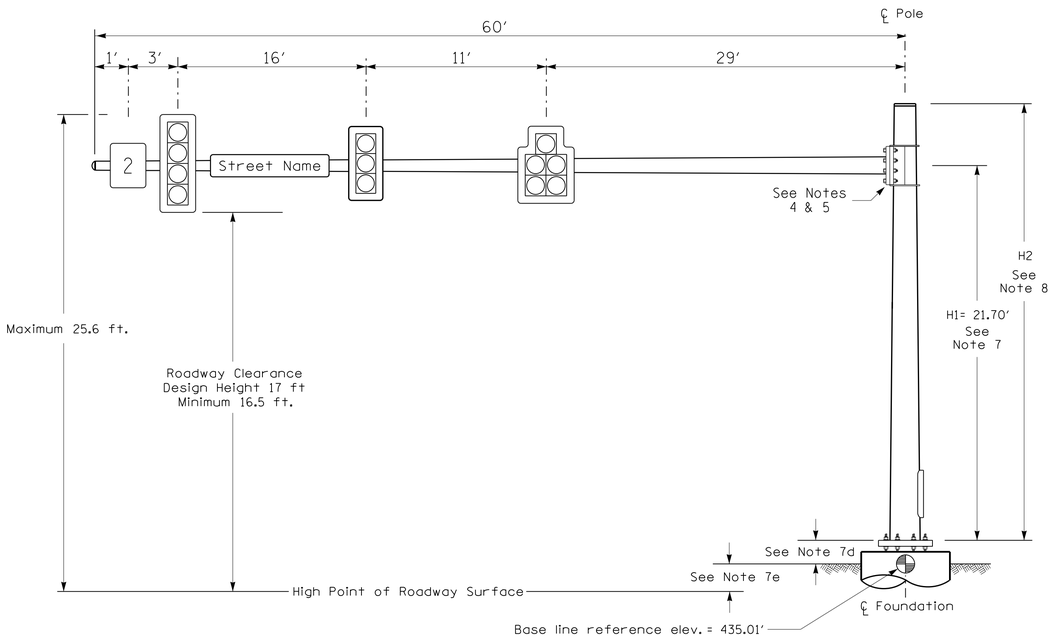

Elevation View

SPECIAL NOTE

The contractor is responsible for verifying that the mast arm attachment height (H1) will provide the "Design Height" clearance from the roadway before submitting final shop drawings for approval. Verify elevation data below which was obtained by field measurement or from available project survey data.

Elevation Data for Mast Arm Attachment (H1)

Elevation Differences for:	Pole 12	
Baseline reference point at ⊕ Foundation @ ground level	435.01 ft.	
Elevation difference at High point of roadway surface	+2.63 ft.	
Elevation difference at Edge of travelway or face of curb	+/-0.0 ft.	

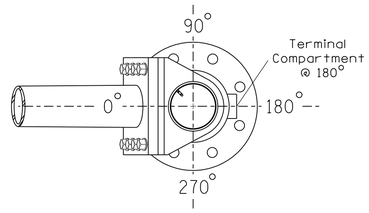

POLE RADIAL ORIENTATION

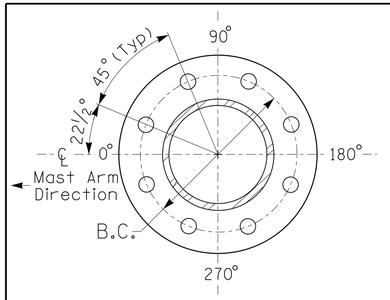

8 BOLT BASE PLATE DETAIL

See Note 6

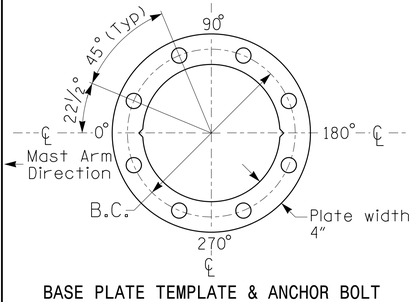

BASE PLATE TEMPLATE & ANCHOR BOLT LOCK PLATE DETAIL

For 8 Bolt Base Plate

MAST ARM LOADING SCHEDULE

LOADING SYMBOL	DESCRIPTION	AREA	SIZE	WEIGHT
	RIGID MOUNTED SIGNAL HEAD 12″-4 SECTION-WITH BACKPLATE	11.5 S.F.	25.5″ W X 66.0″L	74 LBS
	RIGID MOUNTED SIGNAL HEAD 12″-3 SECTION-WITH BACKPLATE	9.3 S.F.	25.5″ W X 52.5″L	60 LBS
	RIGID MOUNTED SIGNAL HEAD 12″-5 SECTION-WITH BACKPLATE	16.3 S.F.	42.0″ W X 56.0″L	103 LBS
Street Name	STREET NAME SIGN RIGID MOUNTED	16.0 S.F.	24.0″ W X 96.0″L	36 LBS
2	SIGN RIGID MOUNTED	7.5 S.F.	30.0″ W X 36.0″L	14 LBS

NOTES

DESIGN REFERENCE MATERIAL

1. Design the traffic signal structure and foundation in accordance with:
   - The 6th Edition 2013 AASHTO "Standard Specifications for Structural Supports for Highway Signs, Luminaires, and Traffic Signals, including all of the latest interim revisions.
   - The 2018 NCDOT "Standard Specifications for Roads and Structures." The latest addenda to the specifications can be found in the traffic signal project special provisions.
   - The 2018 NCDOT Roadway Standard Drawings.
   - The traffic signal project plans and special provisions.
   - The NCDOT "Metal Pole Standards" located at the following NCDOT website: https://connect.ncdot.gov/resources/safety/Pages/ITS-Design-Resources.aspx

DESIGN REQUIREMENTS

2. Design the traffic signal structure using the loading conditions shown in the elevation views. These are anticipated worst case "design loads" and may not represent the actual loads that will be applied at the time of the installation. The contractor should refer to the traffic signal plans for the actual loads that will be applied at the time of the installation.
3. Design all signal supports using stress ratios that do not exceed 0.9.
4. The camber design for the mast arm deflection should provide an appearance of a low pitched arch where the tip or the free end of the mast arm does not deflect below horizontal when fully loaded.
5. A clamp-type bolted mast arm-to-pole connection may be used instead of the welded ring stiffened box connection shown as long as the connection meets all of the design requirements.
6. Design base plate with 8 anchor bolt holes. Provide 2 inch x 60 inch anchor bolts.
7. The mast arm attachment height (H1) shown is based on the following design assumptions:
   a. Mast arm slope and deflection are not considered in determining the arm attachment height as they are assumed to offset each other.
   b. Signal heads are rigidly mounted and vertically centered on the mast arm.
   c. The roadway clearance height for design is as shown in the elevation views.
   d. The top of the pole base plate is 0.75 feet above the ground elevation.
   e. Refer to the Elevation Data Chart for the elevation differences between the proposed foundation ground level and the high point of the roadway.
8. The pole manufacturer will determine the total height (H2) of each pole using the greater of the following:
   - Mast arm attachment height (H1) plus 2 feet, or
   - H1 plus 1/2 of the total height of the mast arm attachment assembly plus 1 foot.
9. If pole location adjustments are required, the contractor must gain approval from the Engineer as this may affect the mast arm lengths and arm attachment heights. The contractor may contact the Signal Design Section Senior Structural Engineer for assistance at (919) 814-5000.
10. The contractor is responsible for verifying that the mast arm length shown will allow proper positioning of the signal heads over the roadway.
11. The contractor is responsible for providing soil penetration testing data (SPT) to the pole manufacturer so site specific foundations can be designed.

NCDOT Wind Zone 4 (90 mph)

Prepared in the Offices of:
Transportation Mobility and Safety Division
NORTH CAROLINA DEPARTMENT OF TRANSPORTATION
Signal Design Section
750 N.Greenfield Pkwy.Garner,NC 27529

NC 42 (Broadway Road)
at
US 421/NC 87 Northbound Ramps/
Coty Plant Entrance

Division 8 Lee County Sanford

PLAN DATE:	NOVEMBER 2019	REVIEWED BY:	D Harris
PREPARED BY:	J Hambright	REVIEWED BY:	B L Watson

SCALE: 0 N/A N/A

REVISIONS	INIT.	DATE

SEAL
NORTH CAROLINA PROFESSIONAL SEAL 43239 ENGINEER REGINA M. MUNCEY

DocuSigned by: Regina M. Muncey 11/5/2019
C7EE518522454FA...
SIGNATURE DATE

SIG. INVENTORY NO. 08-1065

1:43:16 PM
U:\Traffic\Signals\Design\Metal Poles\Loading Diagrams\Loading Diagram_Single Mast Arm_08-1065_12.dgn
User:rmuncey

DocuSign Envelope ID: 7C5AD177-4B9B-45BB-B7A4-06E582EB60F8

PROJECT REFERENCE NO.	SHEET NO.
R-3830	SIG-18.0

DEFAULT PHASING DIAGRAM

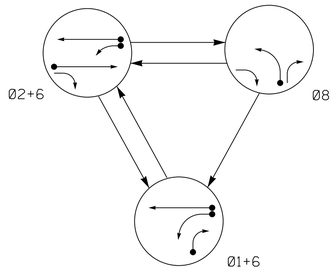

DEFAULT PHASING TABLE OF OPERATION

SIGNAL FACE	PHASE Ø1+6	PHASE Ø2+6	PHASE Ø8	FLASH
11	←~~R~~	←~~FY~~	←~~R~~	~~Y~~
21	R	G	R	Y
22	R	G	R/→	Y
61,62	G	G	R	Y
81,83	R	R	G	R
82	R/→	R	G	R

ALTERNATE PHASING DIAGRAM

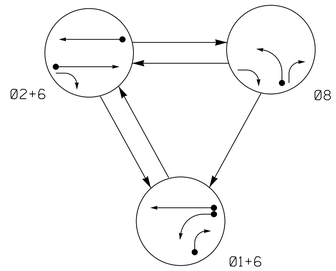

ALTERNATE PHASING TABLE OF OPERATION

SIGNAL FACE	PHASE Ø1+6	PHASE Ø2+6	PHASE Ø8	FLASH
11	←~~R~~	←~~R~~	←~~R~~	~~Y~~
21	R	G	R	Y
22	R	G	R/→	Y
61,62	G	G	R	Y
81,83	R	R	G	R
82	R/→	R	G	R

OASIS 2070 LOOP & DETECTOR INSTALLATION CHART

INDUCTIVE LOOPS					DETECTOR PROGRAMMING							
ZONE	SIZE (FT)	DISTANCE FROM STOPBAR (FT)	TURNS	NEW LOOP	PHASE	CALLING	EXTENSION	FULL TIME DELAY	STRETCH TIME	DELAY TIME	SYSTEM LOOP	NEW CARD
1A	6X40	0	✳	✳	1	Y	Y	-	-	★15	-	✳
					#6	Y	Y	Y	-	3	-	✳
1B	6X40	0	✳	✳	1	Y	Y	-	-	15	-	✳
2A	6X6	300	✳	✳	2	Y	Y	-	-	-	-	✳
2B	6X40	0	✳	✳	2	Y	Y	Y	2.0	5	-	✳
6A	6X6	300	✳	✳	6	Y	Y	-	-	-	-	✳
6B	6X40	0	✳	✳	6	Y	Y	Y	2.0	5	-	✳
8A	6X40	0	✳	✳	8	Y	Y	-	-	3	-	✳

✳ Video Detection Area
★ Reduce delay to 3 sec during Alternate Phasing Operation.
Disable Phase(s) call during Alternate Phasing Operation.

3 Phase
Fully Acutated
Isolated

NOTES

1. Refer to "Roadway Standard Drawings NCDOT" dated January 2018 and "Standard Specifications for Roads and Structures" dated January 2018.
2. Do not program signal for late night flashing operation unless otherwise directed by the Engineer.
3. Phase 1 may be lagged.
4. Set all detector units to presence mode.
5. Locate new cabinet so as not to obstruct sight distance of vehicles turning right on red.
6. The Division Traffic Engineer will determine the hours of use for each phasing plan.
7. This location utilizes a video detection system. Camera locations should be confirmed in the field by the contractor in order to provide detection of the areas indicated.

PHASING DIAGRAM DETECTION LEGEND

- DETECTED MOVEMENT
- UNDETECTED MOVEMENT (OVERLAP)
- UNSIGNALIZED MOVEMENT
- PEDESTRIAN MOVEMENT

SIGNAL FACE I.D.

All Heads L.E.D.

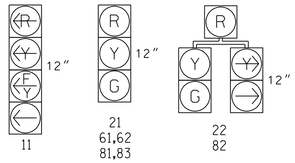

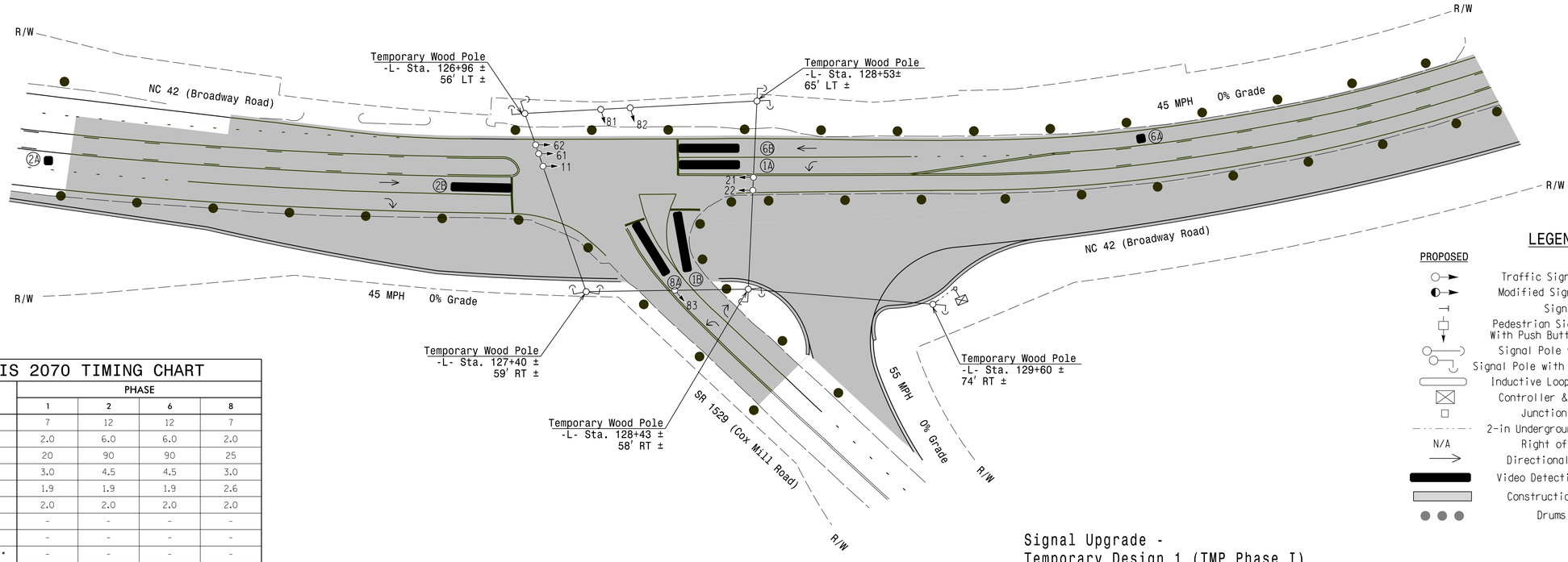

LEGEND

PROPOSED		EXISTING
○→	Traffic Signal Head	●→
◐→	Modified Signal Head	N/A
⊣	Sign	⊣
□↓	Pedestrian Signal Head With Push Button & Sign	■↓
○↘	Signal Pole with Guy	●↘
○↘	Signal Pole with Sidewalk Guy	●↘
▭	Inductive Loop Detector	▭
⊠	Controller & Cabinet	⊠
□	Junction Box	■
----	2-in Underground Conduit	----
N/A	Right of Way	----
→	Directional Arrow	→
▬	Video Detection Area	N/A
▭	Construction Zone	N/A
● ● ●	Drums	N/A

OASIS 2070 TIMING CHART

FEATURE	PHASE 1	2	6	8
Min Green 1 *	7	12	12	7
Extension 1 *	2.0	6.0	6.0	2.0
Max Green 1 *	20	90	90	25
Yellow Clearance	3.0	4.5	4.5	3.0
Red Clearance	1.9	1.9	1.9	2.6
Red Revert	2.0	2.0	2.0	2.0
Walk 1 *	-	-	-	-
Don't Walk 1	-	-	-	-
Seconds Per Actuation *	-	-	-	-
Max Variable Initial *	-	-	-	-
Time Before Reduction *	-	15	15	-
Time To Reduce *	-	30	30	-
Minimum Gap	-	3.2	3.2	-
Recall Mode	-	MIN RECALL	MIN RECALL	-
Vehicle Call Memory	-	-	-	-
Dual Entry	-	-	-	-
Simultaneous Gap	ON	ON	ON	ON

* These values may be field adjusted. Do not adjust Min Green and Extension times for phases 2 and 6 lower than what is shown. Min Green for all other phases should not be lower than 4 seconds.

Signal Upgrade -
Temporary Design 1 (TMP Phase I)

DOCUMENT NOT CONSIDERED FINAL UNLESS ALL SIGNATURES COMPLETED

Stantec
Stantec Consulting Services Inc.
801 Jones Franklin Road-Suite 300
Raleigh, NC 27606
Tel. (919) 851-6866
Fax. (919) 851-7024
www.stantec.com
License No. F-0672

Prepared for the Offices of:
Transportation Mobility and Safety Division
NORTH CAROLINA DEPARTMENT OF TRANSPORTATION
Signal Design Section
750 N.Greenfield Pkwy.Garner,NC 27529

SCALE 0 40 1"=40'

NC 42 (Broadway Road)
at
SR 1529 (Cox Mill Road)

Division 8 | Lee County | Sanford

PLAN DATE: October 2019 | REVIEWED BY: D Harris
PREPARED BY: B T Keffer | REVIEWED BY: B L Watson

REVISIONS	INIT.	DATE

NORTH CAROLINA PROFESSIONAL SEAL 43239 ENGINEER REGINA M. MUNCEY

DocuSigned by: Regina M. Muncey 10/3/2019
SIGNATURE DATE

SIG. INVENTORY NO. 08-06497I

$$$$$$SYSDATE$$$$$
SIG-18.dgn
10:45:21 AM
User:rmuncey
w:\traffic\Signals\Design\Signal Design\Temporary Design\R-3830_sig_dsn_08-06497I.dgn

DocuSign Envelope ID: 7C5AD177-4B9B-45BB-B7A4-06E582EB60F8

EDI MODEL 2018ECL-NC CONFLICT MONITOR PROGRAMMING DETAIL

(remove jumpers and set switches as shown)

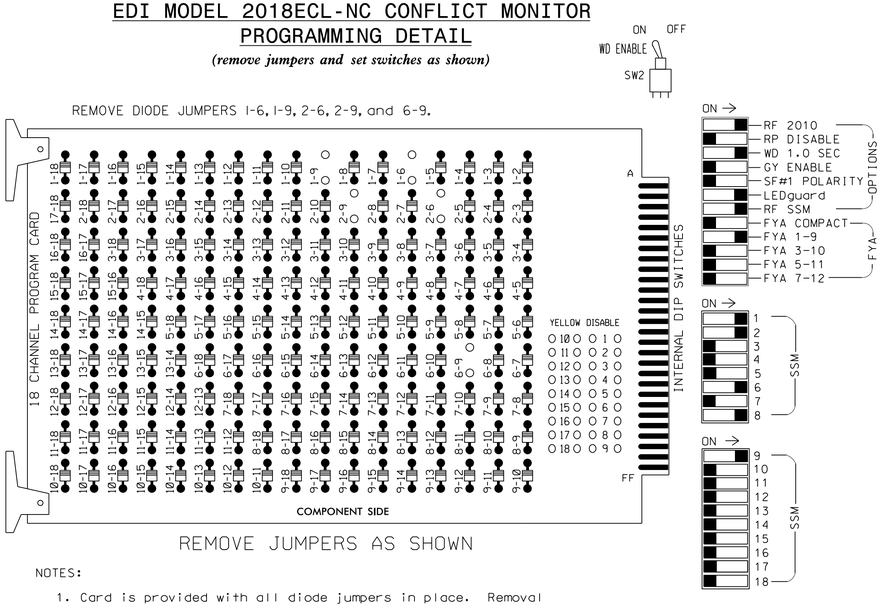

REMOVE JUMPERS AS SHOWN

NOTES:

1. Card is provided with all diode jumpers in place. Removal of any jumper allows its channels to run concurrently.
2. Ensure jumpers SEL2-SEL5 and SEL9 are present on the monitor board.
3. Ensure that Red Enable is active at all times during normal operation.
4. Connect serial cable from conflict monitor to comm. port 1 of 2070 controller. Ensure conflict monitor communicates with 2070.

■ = DENOTES POSITION OF SWITCH

NOTES

1. To prevent "flash-conflict" problems, insert red flash program blocks for all unused vehicle load switches in the output file. The installer shall verify that signal heads flash in accordance with the Signal Plans.
2. Enable Simultaneous Gap-Out for all Phases.
3. Program phases 2 and 6 for Gap Reduction.
4. Program phases 2 and 6 for Startup In Green.
5. Program phases 2 and 6 for Yellow Flash, and overlap 1 as Wag Overlaps.

EQUIPMENT INFORMATION

CONTROLLER.....2070
CABINET.....332 W/ AUX
SOFTWARE.....ECONOLITE OASIS
CABINET MOUNT.....BASE
OUTPUT FILE POSITIONS...18 WITH AUX. OUTPUT FILE
LOAD SWITCHES USED.....S1,S2,S8,S11,AUXS1
PHASES USED.....1,2,6,8
OVERLAP "A".....1+2
OVERLAP "B".....NOT USED
OVERLAP "B".....NOT USED
OVERLAP "D".....NOT USED

PROJECT REFERENCE NO.	SHEET NO.
R-3830	Sig. 18.1

SIGNAL HEAD HOOK-UP CHART

LOAD SWITCH NO.	S1		S2	S3	S4	S5	S6	S7	S8	S9	S10	S11		S12	AUX S1	AUX S2	AUX S3	AUX S4	AUX S5	AUX S6
CMU CHANNEL NO.	1		2	13	3	4	14	5	6	15	7	8		16	9	10	17	11	12	18
PHASE	1		2	2 PED	3	4	4 PED	5	6	6 PED	7	8		8 PED	OLA	OLB	SPARE	OLC	OLD	SPARE
SIGNAL HEAD NO.	11 ★	82	21,22	NU	NU	NU	NU	NU	61,62	NU	NU	81,82, 83	22	NU	11 ★	NU	NU	NU	NU	NU
RED		✳	128						134			107								
YELLOW			129						135			108								
GREEN			130						136			109								
RED ARROW															A121					
YELLOW ARROW		126											108		A122					
FLASHING YELLOW ARROW															A123					
GREEN ARROW	127	127											109							

NU = Not Used

✳ Denotes install load resistor. See load resistor installation detail this sheet.

★ See pictorial of head wiring in detail this sheet.

FYA SIGNAL WIRING DETAIL

(wire signal heads as shown)

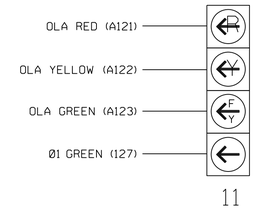

NOTE

The sequence display for signal head 11 requires special logic programming. See sheet 2 for programming instructions.

INPUT FILE POSITION LAYOUT

(front view)

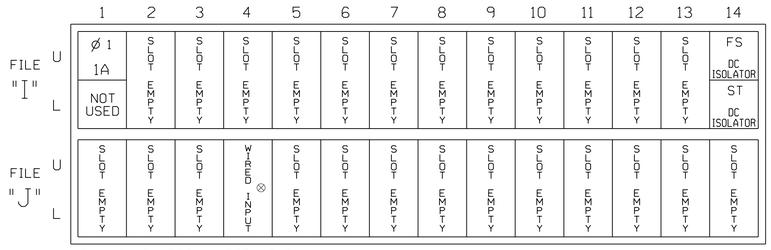

EX.: 1A, 2A, ETC. = LOOP NO.'S

FS = FLASH SENSE
ST = STOP TIME

⊗ Wired Inp - Do no pop la e slo 1 h de ec or card

INPUT FILE CONNECTION & PROGRAMMING CHART

LOOP NO.	LOOP TERMINAL	INPUT FILE POS.	PIN NO.	INPUT ASSIGNMENT NO.	DETECTOR NO.	NEMA PHASE	CALL	EXTEND	FULL TIME DELAY	STRETCH TIME	DELAY TIME
1A[1]	TB2-1,2	I1U	56	18	1	1	Y	Y			15
	-	J4U	48	10 ★	26	6	Y	Y	Y		3
	-	I1U	56	18 ★	51	1	Y	Y			3

[1] Add jumper from I1-W to J4-W, on rear of input file.

★ See Input Page Assignment programming details on sheet 3.

INPUT FILE POSITION LEGEND: J2L
FILE J
SLOT 2
LOWER

LOAD RESISTOR INSTALLATION DETAIL

(install resistors as shown below)

ACCEPTABLE VALUES	
VALUE (ohms)	WATTAGE
1.5K - 1.9K	25W (min)
2.0K - 3.0K	10W (min)

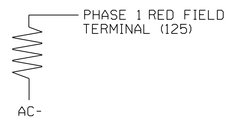

DETECTOR NOTES

1. For all loops install a video detection system for vehicle detection. Perform installation according to manufacturer's directions and NCDOT engineer-approved mounting locations to accomplish the detection schemes shown on the Signal Design Plans.
2. For loop 5A, detector card placement and slot reserved for wired input are typical for a NCDOT installation. Input associated with this slot are compatible with time of day instructions located on sheet 3 of this electrical detail.

THIS ELECTRICAL DETAIL IS FOR
THE SIGNAL DESIGN: 08-0649T1
DESIGNED: OCTOBER 2019
SEALED: 10-03-2019
REVISED:

Temporary Design 1 - (TMP Phase I)
Electrical Detail - Sheet 1 of 4

DOCUMENT NOT CONSIDERED FINAL UNLESS ALL SIGNATURES COMPLETED

Stantec
Stantec Consulting Services Inc.
801 Jones Franklin Road-Suite 300
Raleigh, NC 27606
Tel. (919) 851-6866
Fax. (919) 851-7024
www.stantec.com
License No. F-0672

ELECTRICAL AND PROGRAMMING DETAILS FOR

Prepared for the Offices of:
N.C. Department of Transportation
Mobility and Safety Division
Traffic Engineering Branch
Traffic Signals & Signals Management Section

750 N.Greenfield Pkwy.Garner,NC 27529

NC 42 (Broadway Road)
at
SR 1529 (Cox Mill Road)

Division 8 Lee County Sanford

PLAN DATE:	October 2019	REVIEWED BY:	E D Harris
PREPARED BY:	R M Muncey	REVIEWED BY:	-

REVISIONS	INIT.	DATE

SEAL
NORTH CAROLINA PROFESSIONAL ENGINEER SEAL 43239 REGINA M. MUNCEY

DocuSigned by: Regina M. Muncey 10/3/2019
SIGNATURE DATE

SIG. INVENTORY NO. 08-0649T1

8:45:39 AM
U:\Traffic\Signals\Designs\Electrical Details*Temporary Designs\R-3830_sm_ele_08-0649T1.dgn
User:rmuncey

DocuSign Envelope ID: 7C5AD177-4B9B-45BB-B7A4-06E582EB60F8

PROJECT REFERENCE NO.	SHEET NO.
R-3830	Sig. 18.2

LOGICAL I/O PROCESSOR PROGRAMMING DETAIL TO PRODUCE SPECIAL FYA-PPLT SIGNAL SEQUENCE

(program controller as shown below)

1. FROM MAIN MENU PRESS '2' (PHASE CONTROL), THEN '1' (PHASE CONTROL FUNCTIONS). SCROLL TO THE BOTTOM OF THE MENU AND ENABLE ACT LOGIC COMMANDS 1, 2, AND 3.

2. FROM MAIN MENU PRESS '6' (OUTPUTS), THEN '3' (LOGICAL I/O PROCESSOR).

```
  LOGICAL I/O COMMAND #1  (+/-COMMAND#)
IF  ACTIVE PHASE       #1  IS ON
AND RED CLEAR ON PHASE #1  IS ON

                SCROLL DOWN

THEN:
SET OUTPUT  ASSIGNMENT #50 ON
SET OUTPUT  ASSIGNMENT #51 OFF
```

NOTE: LOGIC FOR PHASE 1 RED CLEAR WHEN TRANSITIONING FROM PHASE 1 TO PHASE 2 (HEAD 11).

PRESS '+'

```
  LOGICAL I/O COMMAND #2  (+/-COMMAND#)
IF  ACTIVE PHASE       #1  IS ON

                SCROLL DOWN

THEN:
SET OUTPUT  ASSIGNMENT #52 OFF
```

NOTE: LOGIC FOR SWITCHING FLASHING YELLOW ARROW OFF DURING PHASE 1 (HEAD 11).

PRESS '+'

```
  LOGICAL I/O COMMAND #3  (+/-COMMAND#)
IF  YELLOW ON PHASE    #1  IS ON

                SCROLL DOWN

THEN:
SET OUTPUT  ASSIGNMENT #51 ON
```

NOTE: LOGIC FOR YELLOW ARROW CLEARANCE FROM PHASE 1 (HEAD 11).

LOGIC I/O PROCESSOR PROGRAMMING COMPLETE

OUTPUT REFERENCE SCHEDULE

OUTPUT 50 = Overlap A Red
OUTPUT 51 = Overlap A Yellow
OUTPUT 52 = Overlap A Green

OVERLAP PROGRAMMING DETAIL FOR DEFAULT PHASING

(program controller as shown below)

FROM MAIN MENU PRESS '8' (OVERLAPS), THEN '1' (VEHICLE OVERLAP SETTINGS).

```
 PAGE 1: VEHICLE OVERLAP 'A' SETTINGS
 PHASE:          |123456789101111213141516
VEH OVL PARENTS: |XX
VEH OVL NOT VEH: |
VEH OVL NOT PED: |
VEH OVL GRN EXT: |
STARTUP COLOR: _ RED  _ YELLOW  _ GREEN
FLASH COLORS:  _ RED  _ YELLOW  X GREEN
SELECT VEHICLE OVERLAP OPTIONS:   (Y/N)
FLASH YELLOW IN CONTROLLER FLASH?...Y
GREEN EXTENSION (0-255 SEC).........0
YELLOW CLEAR (0=PARENT,3-25.5 SEC)..0.0
RED CLEAR (0=PARENT,0.1-25.5 SEC)...0.0
OUTPUT AS PHASE # (0=NONE, 1-16)....0
```

← NOTICE GREEN FLASH

OVERLAP PROGRAMMING COMPLETE

OVERLAP PROGRAMMING DETAIL FOR ALTERNATE PHASING

(program controller as shown below)

FROM MAIN MENU PRESS '8' (OVERLAPS), THEN '1' (VEHICLE OVERLAP SETTINGS). PRESS 'NEXT' TO ADVANCE TO PAGE 2.

NOTICE PAGE 2 →

```
 PAGE 2: VEHICLE OVERLAP 'A' SETTINGS
 PHASE:          |123456789101111213141516
VEH OVL PARENTS: |X
VEH OVL NOT VEH: |
VEH OVL NOT PED: |
VEH OVL GRN EXT: |
STARTUP COLOR: _ RED  _ YELLOW  _ GREEN
FLASH COLORS:  _ RED  _ YELLOW  _ GREEN
SELECT VEHICLE OVERLAP OPTIONS:   (Y/N)
FLASH YELLOW IN CONTROLLER FLASH?...Y
GREEN EXTENSION (0-255 SEC).........0
YELLOW CLEAR (0=PARENT,3-25.5 SEC)..0.0
RED CLEAR (0=PARENT,0.1-25.5 SEC)...0.0
OUTPUT AS PHASE # (0=NONE, 1-16)....0
```

OVERLAP PROGRAMMING COMPLETE

THIS ELECTRICAL DETAIL IS FOR
THE SIGNAL DESIGN: 08-0649T1
DESIGNED: OCTOBER 2019
SEALED: 10-03-2019
REVISED:

Temporary Design 1 - (TMP Phase I)
Electrical Detail - Sheet 2 of 4

DOCUMENT NOT CONSIDERED FINAL UNLESS ALL SIGNATURES COMPLETED

Stantec
Stantec Consulting Services Inc.
801 Jones Franklin Road-Suite 300
Raleigh, NC 27606
Tel. (919) 851-6866
Fax. (919) 851-7024
www.stantec.com
License No. F-0672

ELECTRICAL AND PROGRAMMING DETAILS FOR

Prepared for the Offices of:
Traffic Engineering Branch, Mobility and Safety Division
NC DEPARTMENT OF TRANSPORTATION
Traffic Engineering & Signal Management Section
750 N.Greenfield Pkwy.Garner,NC 27529

NC 42 (Broadway Road)
at
SR 1529 (Cox Mill Road)

Division 8 | Lee County | Sanford

PLAN DATE:	October 2019	REVIEWED BY:	E D Harris
PREPARED BY:	R M Muncey	REVIEWED BY:	-

REVISIONS	INIT.	DATE

SEAL
NORTH CAROLINA PROFESSIONAL SEAL 43239 ENGINEER REGINA M. MUNCEY

DocuSigned by: Regina M. Muncey 10/3/2019
SIGNATURE DATE

SIG. INVENTORY NO. 08-0649T1

01:45:46 AM
User:rmuncey
U:\Projects\Designs\Design\Electrical Details*Temporary Designs\R-3830_sm_ele_08-0649T1.dgn

DocuSign Envelope ID: 7C5AD177-4B9B-45BB-B7A4-06E582EB60F8

PROJECT REFERENCE NO.	SHEET NO.
R-3830	Sig. 18.3

INPUT PAGE 2 ASSIGNMENT PROGRAMMING DETAIL FOR ALTERNATE PHASING - LOOP 1A

(program controller as shown below)

NOTES: 1. THIS PROGRAMMING APPLIES FOR INPUT PAGE 2 ONLY. INPUT PAGE 1 WILL USE STANDARD DEFAULT SETTINGS. THIS PROGRAMMING IS NECESSARY FOR PROPER DETECTOR OPERATION DURING ALTERNATE PHASING OPERATION.

2. THE FIRST TASK THIS PROGRAMMING ACCOMPLISHES IS THE DISABLING OF INPUT #10 (DETECTOR 26) SO THAT A VEHICLE CALL WILL NOT BE PLACED TO PHASE 6 DURING ALTERNATE PHASING OPERATION. THE SECOND TASK THIS PROGRAMMING ACCOMPLISHES IS THAT IT REASSIGNS DETECTOR 51 TO INPUT #18 SO THAT THE DELAY ON LOOP 1A CAN BE REDUCED FROM 15 SECONDS TO 3 SECONDS.

FROM MAIN MENU PRESS '5' (INPUTS), THEN PRESS 'NEXT' TO GET TO INPUT PAGE '2'. PRESS THE '+' KEY UNTIL INPUT 10 IS REACHED.

```
PAGE: 2 C1 PIN:48  VEHICLE DETECTOR
INPUT ASSIGNMENT #.................10
DEBOUNCE TIME (0-25.5 SEC).........0.5
DELAY TIME (0-25.5 SEC).............0.0
HOLD-OVER TIME (0-25.5 SEC).........0.0
ASSIGNMENT SELECTION:
NOT ENABLED (Y/N)...................Y
VEHICLE DETECTOR (1-64).............26
PEDESTRIAN DETECTOR (1-16).........._
ALTERNATE PED DETECTOR (1-16)......._
PREEMPT (1-10)......................._
INVERTED PREEMPT (1-10).............._
STOP TIME (Y/N)......................_
FLASH SENSE (Y/N)...................._
DOOR OPEN (Y/N)......................_
MANUAL CONTROL ENABLE (Y/N).........._
MANUAL CONTROL ADVANCE (Y/N)........._
SPECIAL FUNCTION ALARM (1-8)........._
TOD HOUR SYCHRONIZATION (0-23)......._
FORCE OFF RING (1-4)................._
HOLD PHASES (1-16)..................._
PLAN (65=FLSH,66=FREE)..._  OFFSET#.._
CHANGE PHASE SEQUENCE PAGE (1-12)...._
CHANGE PHASE TIMING PAGE (1-4)......._
CHANGE PHASE CONTROL PAGE (1-4)......_
CHANGE OVERLAP CONTROL PAGE (1-4)...._
CHANGE INPUT PAGE (1-4).............._
CHANGE OUTPUT PAGE (1-4)............._
OVERRIDE PHASE CONTROL FUNCTION (Y)._
```

ENTER A 'Y' FOR NOT ENABLED

DEFAULT DETECTOR NUMBER WILL REMAIN UNTIL 'NOT ENABLED' IS ENTERED.

(LOOP 1A - PHASE 6)

```
PAGE: 2 C1 PIN:48  NOT ENABLED
INPUT ASSIGNMENT #.................10
DEBOUNCE TIME (0-25.5 SEC).........0.5
DELAY TIME (0-25.5 SEC).............0.0
HOLD-OVER TIME (0-25.5 SEC).........0.0
ASSIGNMENT SELECTION:
NOT ENABLED (Y/N)...................Y
VEHICLE DETECTOR (1-64).............._
PEDESTRIAN DETECTOR (1-16).........._
ALTERNATE PED DETECTOR (1-16)......._
PREEMPT (1-10)......................._
INVERTED PREEMPT (1-10).............._
STOP TIME (Y/N)......................_
FLASH SENSE (Y/N)...................._
DOOR OPEN (Y/N)......................_
MANUAL CONTROL ENABLE (Y/N).........._
MANUAL CONTROL ADVANCE (Y/N)........._
SPECIAL FUNCTION ALARM (1-8)........._
TOD HOUR SYCHRONIZATION (0-23)......._
FORCE OFF RING (1-4)................._
HOLD PHASES (1-16)..................._
PLAN (65=FLSH,66=FREE)..._  OFFSET#.._
CHANGE PHASE SEQUENCE PAGE (1-12)...._
CHANGE PHASE TIMING PAGE (1-4)......._
CHANGE PHASE CONTROL PAGE (1-4)......_
CHANGE OVERLAP CONTROL PAGE (1-4)...._
CHANGE INPUT PAGE (1-4).............._
CHANGE OUTPUT PAGE (1-4)............._
OVERRIDE PHASE CONTROL FUNCTION (Y)._
```

PRESS '+' TO ADVANCE TO INPUT 18

```
PAGE: 2 C1 PIN:56  VEHICLE DETECTOR
INPUT ASSIGNMENT #.................18
DEBOUNCE TIME (0-25.5 SEC).........0.5
DELAY TIME (0-25.5 SEC).............0.0
HOLD-OVER TIME (0-25.5 SEC).........0.0
ASSIGNMENT SELECTION:
NOT ENABLED (Y/N)...................._
VEHICLE DETECTOR (1-64).............1
PEDESTRIAN DETECTOR (1-16).........._
ALTERNATE PED DETECTOR (1-16)......._
PREEMPT (1-10)......................._
INVERTED PREEMPT (1-10).............._
STOP TIME (Y/N)....................._
FLASH SENSE (Y/N)...................._
DOOR OPEN (Y/N)....................._
MANUAL CONTROL ENABLE (Y/N).........._
MANUAL CONTROL ADVANCE (Y/N)........._
SPECIAL FUNCTION ALARM (1-8)........._
TOD HOUR SYCHRONIZATION (0-23)......._
FORCE OFF RING (1-4)................._
HOLD PHASES (1-16)..................._
PLAN (65=FLSH,66=FREE)..._  OFFSET#.._
CHANGE PHASE SEQUENCE PAGE (1-12)...._
CHANGE PHASE TIMING PAGE (1-4)......._
CHANGE PHASE CONTROL PAGE (1-4)......_
CHANGE OVERLAP CONTROL PAGE (1-4)...._
CHANGE INPUT PAGE (1-4).............._
CHANGE OUTPUT PAGE (1-4)............._
OVERRIDE PHASE CONTROL FUNCTION (Y)._
```

ENTER '51' TO REASSIGN THE VEHICLE DETECTOR FOR THIS INPUT

(LOOP 1A - PHASE 1)

```
PAGE: 2 C1 PIN:56  VEHICLE DETECTOR
INPUT ASSIGNMENT #.................18
DEBOUNCE TIME (0-25.5 SEC).........0.5
DELAY TIME (0-25.5 SEC).............0.0
HOLD-OVER TIME (0-25.5 SEC).........0.0
ASSIGNMENT SELECTION:
NOT ENABLED (Y/N)...................._
VEHICLE DETECTOR (1-64).............51
PEDESTRIAN DETECTOR (1-16).........._
ALTERNATE PED DETECTOR (1-16)......._
PREEMPT (1-10)......................._
INVERTED PREEMPT (1-10).............._
STOP TIME (Y/N)....................._
FLASH SENSE (Y/N)...................._
DOOR OPEN (Y/N)....................._
MANUAL CONTROL ENABLE (Y/N).........._
MANUAL CONTROL ADVANCE (Y/N)........._
SPECIAL FUNCTION ALARM (1-8)........._
TOD HOUR SYCHRONIZATION (0-23)......._
FORCE OFF RING (1-4)................._
HOLD PHASES (1-16)..................._
PLAN (65=FLSH,66=FREE)..._  OFFSET#.._
CHANGE PHASE SEQUENCE PAGE (1-12)...._
CHANGE PHASE TIMING PAGE (1-4)......._
CHANGE PHASE CONTROL PAGE (1-4)......_
CHANGE OVERLAP CONTROL PAGE (1-4)...._
CHANGE INPUT PAGE (1-4).............._
CHANGE OUTPUT PAGE (1-4)............._
OVERRIDE PHASE CONTROL FUNCTION (Y)._
```

PROGRAMMING COMPLETE

SPECIAL DETECTOR PROGRAMMING DETAIL - LOOP 1A (ALT.)

(program controller as shown below)

FROM MAIN MENU PRESS '7' (DETECTORS), THEN PRESS '1' FOR VEHICLE DETECTORS. PRESS THE '-' KEY TO GET TO VEHICLE DETECTOR #51.

```
VEHICLE DETECTOR #51  SETTINGS (+-,1-64)
SETTING:                          (Y/N)
ENABLE DETECTOR.....................N
ENABLE LOGGING......................N
ENABLE DIAGNOSTICS..................N
SPEED TRAP..........................N
CALL DETECTOR.......................Y
EXTENSION DETECTOR..................Y
MODE 2 STOP BAR.....................N
SWITCHING DETECTOR..................N
DUPLICATING DETECTOR................N
ENABLE FULL TIME DELAY..............N
IF FAILED, SET MIN RECALL?..........N
IF FAILED, SET MAX1 RECALL?.........N
IF FAILED, SET MAX2 RECALL?.........N
PHASE#          ¦12345678910111213141516
PHASES ASSIGNED ¦
SWITCH/DUPLICATE¦
LOOP SIZE (0-255 FT)................6
SPEED TRAP DISTANCE (0-255 FT)......0
STOP BAR TIME (0-255 SEC)...........0
STRETCH (0-25.5 SEC)................0.0
DELAY (0-255 SEC)...................0
MAX CALLS/MIN (0-255)..............255
MIN CALLS/DIAGNOSTIC PERIOD (0-255).0
MAX OCCUPANCY (0-100%).............100
EXTENSION DISABLE TIME (0-255 SEC)..0
QUEUE MAX OCCUPANCY TIME (0-255)....0
QUEUE GAP RESET TIME (0-25.5).......0.0
PREEMPTION INDEX FOR QUEUE (0-10)...0
```

ENTER 'Y' FOR ENABLE DETECTOR

ENTER '1' FOR PHASES ASSIGNED

ENSURE DELAY IS '3'

```
VEHICLE DETECTOR #51  SETTINGS (+-,1-64)
SETTING:                          (Y/N)
ENABLE DETECTOR.....................Y
ENABLE LOGGING......................N
ENABLE DIAGNOSTICS..................N
SPEED TRAP..........................N
CALL DETECTOR.......................Y
EXTENSION DETECTOR..................Y
MODE 2 STOP BAR.....................N
SWITCHING DETECTOR..................N
DUPLICATING DETECTOR................N
ENABLE FULL TIME DELAY..............N
IF FAILED, SET MIN RECALL?..........N
IF FAILED, SET MAX1 RECALL?.........N
IF FAILED, SET MAX2 RECALL?.........N
PHASE#          ¦12345678910111213141516
PHASES ASSIGNED ¦X
SWITCH/DUPLICATE¦
LOOP SIZE (0-255 FT)................6
SPEED TRAP DISTANCE (0-255 FT)......0
STOP BAR TIME (0-255 SEC)...........0
STRETCH (0-25.5 SEC)................0.0
DELAY (0-255 SEC)...................3
MAX CALLS/MIN (0-255)..............255
MIN CALLS/DIAGNOSTIC PERIOD (0-255).0
MAX OCCUPANCY (0-100%).............100
EXTENSION DISABLE TIME (0-255 SEC)..0
QUEUE MAX OCCUPANCY TIME (0-255)....0
QUEUE GAP RESET TIME (0-25.5).......0.0
PREEMPTION INDEX FOR QUEUE (0-10)...0
```

DETECTOR PROGRAMMING COMPLETE

NOTE: DETECTOR IS PROGRAMMED PER THE INPUT FILE CONNECTION AND PROGRAMMING CHART SHOWN ON SHEET 1.

THIS ELECTRICAL DETAIL IS FOR THE SIGNAL DESIGN: 08-0649T1
DESIGNED: OCTOBER 2019
SEALED: 10-03-2019
REVISED:

Temporary Design 1 - (TMP Phase I)
Electrical Detail - Sheet 3 of 4

DOCUMENT NOT CONSIDERED FINAL UNLESS ALL SIGNATURES COMPLETED

Stantec

Stantec Consulting Services Inc.
801 Jones Franklin Road-Suite 300
Raleigh, NC 27606
Tel. (919) 851-6866
Fax. (919) 851-7024
www.stantec.com
License No. F-0672

ELECTRICAL AND PROGRAMMING DETAILS FOR

Prepared for the Offices of:

Transportation Mobility and Safety Division
NORTH CAROLINA DEPARTMENT OF TRANSPORTATION
Traffic Engineering & Signals Management Section

750 N.Greenfield Pkwy,Garner,NC 27529

NC 42 (Broadway Road)
at
SR 1529 (Cox Mill Road)

Division 8 | Lee County | Sanford

PLAN DATE:	October 2019	REVIEWED BY:	E D Harris
PREPARED BY:	R M Muncey	REVIEWED BY:	-

REVISIONS	INIT.	DATE

SEAL
NORTH CAROLINA PROFESSIONAL SEAL 43239 ENGINEER REGINA M. MUNCEY

DocuSigned by: Regina M. Muncey 10/3/2019
SIGNATURE DATE

SIG. INVENTORY NO. 08-0649T1

9:45:54 AM
User:rmuncey
PW:\\Projects\Designations\Design\Electrical Details\Temporary Design\R-3830_sm_ele_08-0649T1.dgn
User:rmuncey

DocuSign Envelope ID: 7C5AD177-4B9B-45BB-B7A4-06E582EB60F8

PROJECT REFERENCE NO.	SHEET NO.
R-3830	Sig. 18.4

ALTERNATE PHASING ACTIVATION DETAIL

TO RUN ALT. PHASING DURING COORDINATION - SELECT ALL PAGE CHANGES (AS SHOWN BELOW) WITHIN COORDINATION PLAN PROGRAMMING.

TO RUN ALT. PHASING DURING FREE RUN - PROGRAM PAGE CHANGES (SHOWN BELOW) IN SEPARATE TIME OF DAY EVENTS. IF PAGE 1 IS USED, NO EVENT PROGRAMMING IS NECESSARY FOR THAT PARTICULAR PAGE.

PHASING	INPUTS PAGE	OVERLAPS PAGE
ACTIVE PAGES REQUIRED TO RUN DEFAULT PHASING	1	1
ACTIVE PAGES REQUIRED TO RUN ALTERNATE PHASING	2	2

NOTE: PAGES NOT SHOWN (i.e. sequence, phase control, etc.) SHOULD REMAIN AS '1', OR AS DEFINED BY TIMING ENGINEER.

IMPORTANT: IF ALT. PHASING IS USED DURING FREE RUN AND COORDINATION, DO NOT OPERATE TIME OF DAY PAGE CHANGE EVENTS CONCURRENTLY WITH COORDINATION PLAN EVENTS IN THE EVENT SCHEDULER. (EX. FREE RUN PAGE CHANGE EVENT SHOULD END BEFORE COORDINATION PLAN EVENT STARTS AND VICE-VERSA).

ALTERNATE PHASING PAGE CHANGE SUMMARY

THE FOLLOWING IS A SUMMARY OF WHAT TAKES PLACE WHEN THESE OVERLAP/INPUT PAGE CHANGES ACTIVATE TO CALL THE "ALTERNATE PHASING":

OVERLAPS PAGE 2: Modifies overlap parent phases for head 11 to run protected turns only.

INPUTS PAGE 2: Disables phase 6 call on loop 1A and reduces delay time for phase 1 call on loop 1A to 3 seconds.

THIS ELECTRICAL DETAIL IS FOR THE SIGNAL DESIGN: 08-0649T1
DESIGNED: OCTOBER 2019
SEALED: 10-03-2019
REVISED:

Temporary Design 1 - (TMP Phase I)
Electrical Detail - Sheet 4 of 4

DOCUMENT NOT CONSIDERED FINAL UNLESS ALL SIGNATURES COMPLETED

Stantec
Stantec Consulting Services Inc.
801 Jones Franklin Road-Suite 300
Raleigh, NC 27606
Tel. (919) 851-6866
Fax. (919) 851-7024
www.stantec.com
License No. F-0672

ELECTRICAL AND PROGRAMMING DETAILS FOR

Prepared for the Offices of:
Mobility and Safety Division
State of North Carolina
Department of Transportation
Signals Management Section
750 N.Greenfield Pkwy,Garner,NC 27529

NC 42 (Broadway Road)
at
SR 1529 (Cox Mill Road)

Division 8 Lee County Sanford

PLAN DATE:	October 2019	REVIEWED BY:	E D Harris
PREPARED BY:	R M Muncey	REVIEWED BY:	-

REVISIONS	INIT.	DATE

SEAL
NORTH CAROLINA PROFESSIONAL SEAL 43239 ENGINEER REGINA M. MUNCEY

DocuSigned by:
Regina M. Muncey 10/3/2019
SIGNATURE DATE

SIG. INVENTORY NO. 08-0649T1

9:46:02 AM
U:\Traffic\Signals\Design\Electrical Details\Temporary Design\R-3830_sm_ele_08-0649T1.dgn
User:rmuncey

PROJECT REFERENCE NO.	SHEET NO.
R-3830	Sig 19.0

DEFAULT PHASING DIAGRAM

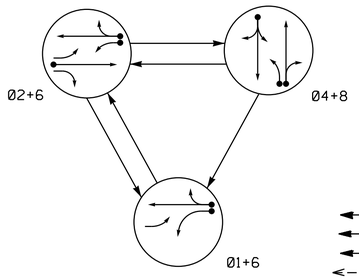

ALTERNATE PHASING DIAGRAM

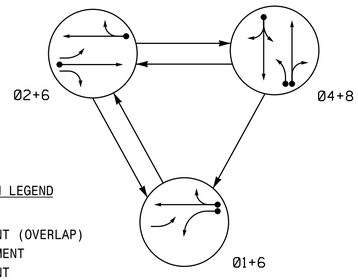

PHASING DIAGRAM DETECTION LEGEND

- DETECTED MOVEMENT
- UNDETECTED MOVEMENT (OVERLAP)
- UNSIGNALIZED MOVEMENT
- PEDESTRIAN MOVEMENT

DEFAULT PHASING TABLE OF OPERATION

SIGNAL FACE	PHASE 01+6	PHASE 02+6	PHASE 04+8	PHASE FLASH
11	←	~~F Y~~	~~R~~	~~Y~~
21	~~F Y~~	~~F Y~~	~~R~~	~~Y~~
22, 23	R	G	R	Y
41, 42	R	R	G	R
61, 62	G	G	R	Y
81	~~R~~	~~R~~	~~F Y~~	~~R~~
82, 83, 84	R	R	G	R

ALTERNATE PHASING TABLE OF OPERATION

SIGNAL FACE	PHASE 01+6	PHASE 02+6	PHASE 04+8	PHASE FLASH
11	←	~~R~~	~~R~~	~~Y~~
21	~~F Y~~	~~F Y~~	~~R~~	~~Y~~
22, 23	R	G	R	Y
41, 42	R	R	G	R
61, 62	G	G	R	Y
81	~~R~~	~~R~~	~~F Y~~	~~R~~
82, 83, 84	R	R	G	R

OASIS 2070 LOOP & DETECTOR INSTALLATION CHART

	INDUCTIVE LOOPS				DETECTOR PROGRAMMING							
ZONE	SIZE (FT)	DISTANCE FROM STOPBAR (FT)	TURNS	NEW LOOP	PHASE	CALLING	EXTENSION	FULL TIME DELAY	STRETCH TIME	DELAY TIME	SYSTEM LOOP	NEW CARD
1A	6X40	0	✳	✳	1	Y	Y	-	-	15★	-	✳
					6#	Y	Y	Y	-	3	-	✳
2A	6X6	300	✳	✳	2	Y	Y	-	-	-	-	✳
4A	6X15	0	✳	✳	4	Y	Y	-	-	10	-	✳
6A	6X6	300	✳	✳	6	Y	Y	-	-	-	-	✳
8A	6X40	0	✳	✳	8	Y	Y	-	-	3	-	✳
8B	6X40	0	✳	✳	8	Y	Y	-	-	10	-	✳

✳ Video Detection Zone
★ Reduce Delay to 3 sec during Alternate Phasing Operation.
Disable Phase(s) call during Alternate Phasing Operation.

3 Phase
Fully Actuated
(Isolated)

NOTES

1. Refer to "Roadway Standard Drawings NCDOT" dated January 2018 and "Standard Specifications for Roads and Structures" dated January 2018.
2. Do not program signal for late night flashing operation unless otherwise directed by the Engineer.
3. Phase 1 may be lagged.
4. Set all detector units to presence mode.
5. The Division Traffic Engineer will determine the hours of use for each phasing plan.
6. This intersection uses video detection. Install detectors according to the manufacturer's instructions to achieve the desired detection.

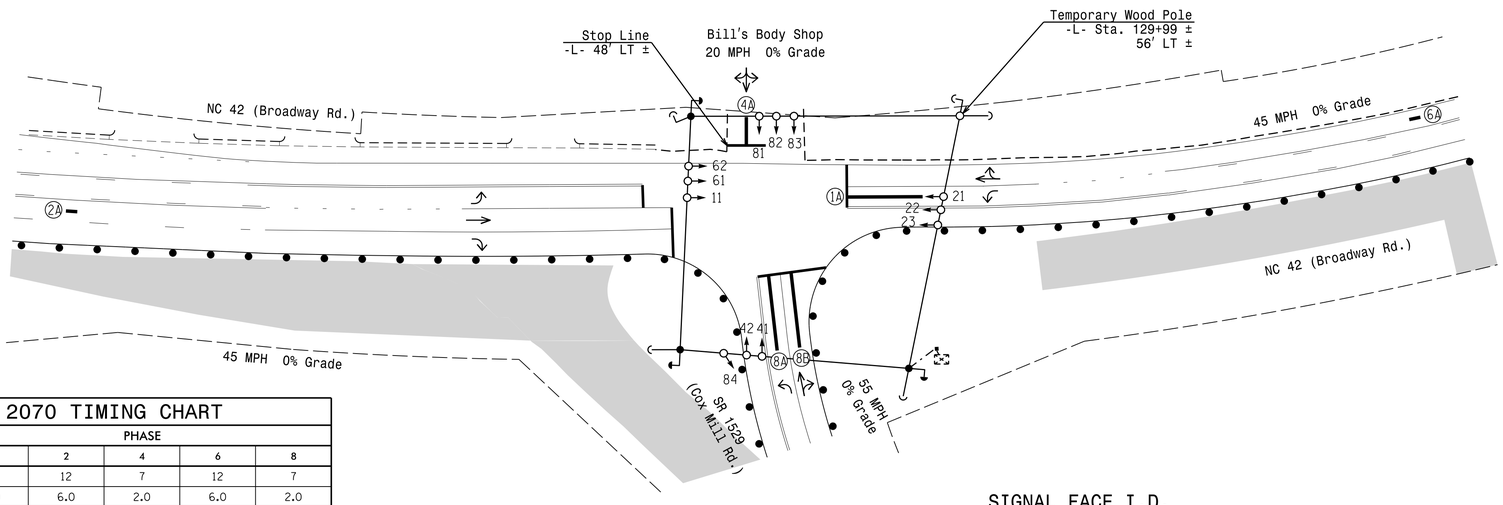

OASIS 2070 TIMING CHART

FEATURE	PHASE 1	PHASE 2	PHASE 4	PHASE 6	PHASE 8
Min Green 1 *	7	12	7	12	7
Extension 1 *	2.0	6.0	2.0	6.0	2.0
Max Green 1 *	20	90	25	90	25
Yellow Clearance	3.0	4.5	3.0	4.5	3.0
Red Clearance	2.1	1.2	2.1	1.2	2.1
Red Revert	2.0	2.0	2.0	2.0	2.0
Walk 1 *	-	-	-	-	-
Don't Walk 1	-	-	-	-	-
Seconds Per Actuation *	-	2.5	-	2.5	-
Max Variable Initial *	-	34	-	34	-
Time Before Reduction *	-	15	-	15	-
Time To Reduce *	-	30	-	30	-
Minimum Gap	-	3.2	-	3.2	-
Recall Mode	-	MIN RECALL	-	MIN RECALL	-
Vehicle Call Memory	-	YELLOW	-	YELLOW	-
Dual Entry	-	-	ON	-	ON
Simultaneous Gap	ON	ON	ON	ON	ON

* These values may be field adjusted. Do not adjust Min Green and Extension times for phases 2 and 6 lower than what is shown. Min Green for all other phases should not be lower than 4 seconds.

SIGNAL FACE I.D.

All Heads L.E.D.

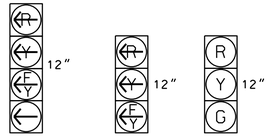

LEGEND

PROPOSED		EXISTING
	Traffic Signal Head	
	Modified Signal Head	N/A
	Sign	
	Pedestrian Signal Head With Push Button & Sign	
	Signal Pole with Guy	
	Signal Pole with Sidewalk Guy	
	Inductive Loop Detector	
	Controller & Cabinet	
	Junction Box	
	2-in Underground Conduit	
N/A	Right of Way	
	Directional Arrow	
	Construction Zone Drums	
	Construction Zone	
	Video Detection Zone	

Signal Upgrade -
Temporary Design 2 (TMP Phase I)

DOCUMENT NOT CONSIDERED FINAL UNLESS ALL SIGNATURES COMPLETED

Prepared in the Offices of:
Transportation Mobility and Safety Division
NORTH CAROLINA DEPARTMENT OF TRANSPORTATION
Signal Design Section
750 N.Greenfield Pkwy.Garner,NC 27529

NC 42 (Broadway Road)
at
SR 1529 (Cox Mill Road)
and Bill's Body Shop

Division 8 Lee County Sanford

PLAN DATE: January 2022 REVIEWED BY:

PREPARED BY: J.A. Lohr REVIEWED BY:

SCALE 0 40 1"=40'

REVISIONS	INIT.	DATE

SEAL
NORTH CAROLINA PROFESSIONAL SEAL 026486 ENGINEER ROBERT J. ZIEMBA

DocuSigned by: Robert Ziemba 1B9B4B9B074A484...
04/20/2022
DATE

SIG. INVENTORY NO. 08-0649T2

20-APR-2022 01:32
W:\R3830492.sig\19_TMP\R-3830492mmsd.dgn
jalohr

PROJECT REFERENCE NO.	SHEET NO.
R-3830	Sig. 19.1

EDI MODEL 2018ECL-NC CONFLICT MONITOR PROGRAMMING DETAIL

(remove jumpers and set switches as shown)

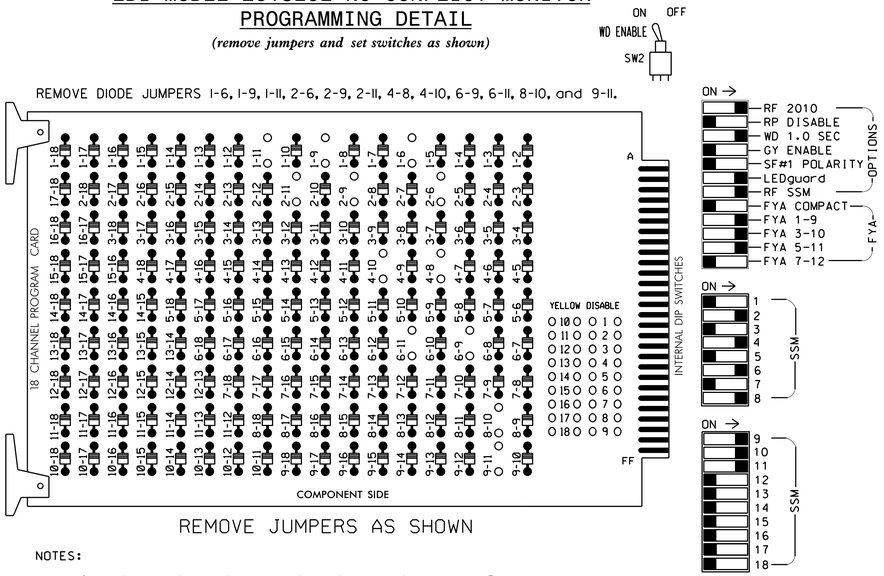

REMOVE JUMPERS AS SHOWN

NOTES:

1. Card is provided with all diode jumpers in place. Removal of any jumper allows its channels to run concurrently.
2. Ensure jumpers SEL2-SEL5 and SEL9 are present on the monitor board.
3. Ensure that Red Enable is active at all times during normal operation.
4. Connect serial cable from conflict monitor to comm. port 1 of 2070 controller. Ensure conflict monitor communicates with 2070.

■ = DENOTES POSITION OF SWITCH

NOTES

1. To prevent "flash-conflict" problems, insert red flash program blocks for all unused vehicle load switches in the output file. The installer shall verify that signal heads flash in accordance with the Signal Plans.
2. Program phases 4 and 8 for Dual Entry.
3. Enable Simultaneous Gap-Out for all Phases.
4. Program phases 2 and 6 for Variable Initial and Gap Reduction.
5. Program phases 2 and 6 for Startup In Green.
6. Program phases 2 and 6 for Yellow Flash, and overlaps 1 and 2 as Wag Overlaps.
7. If this signal will be managed by an ATMS software, enable controller and detector logging for all detectors used at this location.

EQUIPMENT INFORMATION

CONTROLLER.....2070
CABINET.....332 W/ AUX
SOFTWARE.....ECONOLITE OASIS
CABINET MOUNT.....BASE
OUTPUT FILE POSITIONS...18 WITH AUX. OUTPUT FILE
LOAD SWITCHES USED.....S1,S2,S5,S8,S11,AUXS1,AUXS2,AUXS4
PHASES USED.....1,2,4,6,8
OVERLAP "A".....1+2
OVERLAP "B".....4
OVERLAP "C".....6
OVERLAP "D".....NOT USED

SIGNAL HEAD HOOK-UP CHART

LOAD SWITCH NO.	S1	S2	S3	S4	S5	S6	S7	S8	S9	S10	S11	S12	AUX S1	AUX S2	AUX S3	AUX S4	AUX S5	AUX S6
CMU CHANNEL NO.	1	2	13	3	4	14	5	6	15	7	8	16	9	10	17	11	12	18
PHASE	1	2	2 PED	3	4	4 PED	5	6	6 PED	7	8	8 PED	OLA	OLB	SPARE	OLC	OLD	SPARE
SIGNAL HEAD NO.	11★	22,23	NU	NU	41,42	NU	NU	61,62	NU	NU	82,83 84	NU	11★	81★	NU	21★	NU	NU
RED		128			101			134			107							
YELLOW	✳	129			102			135			108							
GREEN		130			103			136			109							
RED ARROW													A121	A124		A114		
YELLOW ARROW													A122	A125		A115		
FLASHING YELLOW ARROW													A123	A126		A116		
GREEN ARROW	127																	

NU = Not Used

✳ Denotes install load resistor. See load resistor installation detail this sheet.

★ See pictorial of head wiring in detail this sheet.

FYA SIGNAL WIRING DETAIL

(wire signal heads as shown)

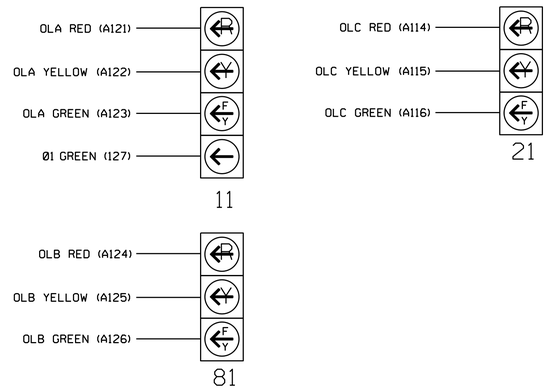

NOTE

The sequence display for signal head 11 requires special logic programming. See sheet 2 for programming instructions.

INPUT FILE POSITION LAYOUT

(front view)

		1	2	3	4	5	6	7	8	9	10	11	12	13	14
FILE "I"	U	Ø 1	SLOT	SLOT	SLOT	SLOT	SLOT	SLOT	SLOT	SLOT	SLOT	SLOT	SLOT	SLOT	FS
	L	1A NOT USED	EMPTY	EMPTY	EMPTY	EMPTY	EMPTY	EMPTY	EMPTY	EMPTY	EMPTY	EMPTY	EMPTY	EMPTY	DC ISOLATOR / ST / DC ISOLATOR
FILE "J"	U	SLOT	SLOT	SLOT	WIRED ⊗ INPUT	SLOT	SLOT	SLOT	SLOT	SLOT	SLOT	SLOT	SLOT	SLOT	SLOT
	L	EMPTY	EMPTY	EMPTY		EMPTY	EMPTY	EMPTY	EMPTY	EMPTY	EMPTY	EMPTY	EMPTY	EMPTY	EMPTY

EX.: 1A, 2A, ETC. = LOOP NO.'S

FS = FLASH SENSE
ST = STOP TIME

⊗ Wired Input - Do not populate slot with detector card

INPUT FILE CONNECTION & PROGRAMMING CHART

LOOP NO.	LOOP TERMINAL	INPUT FILE POS.	PIN NO.	INPUT ASSIGNMENT NO.	DETECTOR NO.	NEMA PHASE	CALL	EXTEND	FULL TIME DELAY	STRETCH TIME	DELAY TIME
1A[1]	TB2-1,2	I1U	56	18	1	1	Y	Y			15
	-	J4U	48	10★	26	6	Y	Y	Y		3
	-	I1U	56	18★	51	1	Y	Y			3

[1] Add jumper from I1-W to J4-W, on rear of input file.

★ See Input Page Assignment programming details on sheet 3.

INPUT FILE POSITION LEGEND: J2L
FILE J
SLOT 2
LOWER

LOAD RESISTOR INSTALLATION DETAIL

(install resistor as shown below)

ACCEPTABLE VALUES	
VALUE (ohms)	WATTAGE
1.5K - 1.9K	25W (min)
2.0K - 3.0K	10W (min)

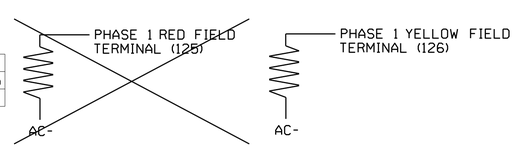

REMOVE, IF PRESENT

DETECTOR NOTES

1. For all loops install a video detection system for vehicle detection. Perform installation according to manufacturer's directions and NCDOT engineer-approved mounting locations to accomplish the detection schemes shown on the Signal Design Plans.
2. For loop 1A, detector card placement and slot reserved for wired input are typical for a NCDOT installation. Input associated with this slot are compatible with time of day instructions located on sheet 3 of this electrical detail.

THIS ELECTRICAL DETAIL IS FOR
THE SIGNAL DESIGN: 08-0649T2
DESIGNED: JANUARY 2022
SEALED: 4/20/2022
REVISED: N/A

Temporary Design 2 - (TMP Phase I)
Electrical Detail - Sheet 1 of 4

DOCUMENT NOT CONSIDERED FINAL UNLESS ALL SIGNATURES COMPLETED

ELECTRICAL AND PROGRAMMING DETAILS FOR:

Prepared for the Offices of: NC Department of Transportation, Transportation Mobility and Safety Division, Traffic Engineering Branch, Signals Management Section

750 N.Greenfield Pkwy.Garner,NC 27529

NC 42 (Broadway Road) at SR 1529 (Cox Mill Road) and Bill's Body Shop

Division 8 Lee County Sanford

PLAN DATE:	April 2022	REVIEWED BY:	Todd Joyce
PREPARED BY:	Keith M. Mims	REVIEWED BY:	-

REVISIONS	INIT.	DATE

SEAL

NORTH CAROLINA PROFESSIONAL SEAL 036880 ENGINEER KEITH M. MIMS

DocuSigned by: Keith M. Mims 04/21/2022

SIG. INVENTORY NO. 08-0649T2

21-APR-2022 13:58
S:\Traffic Signals\Workgroups\Sig Mgmt\Projects From Signal Design\Active Projects\Mims\In-house\08-0649\08649_sm_ele_t2_xxxxxx.dgn
kmims

PROJECT REFERENCE NO.	SHEET NO.
R-3830	Sig. 19.2

LOGICAL I/O PROCESSOR PROGRAMMING DETAIL TO PRODUCE SPECIAL FYA-PPLT SIGNAL SEQUENCE

(program controller as shown below)

1. FROM MAIN MENU PRESS '2' (PHASE CONTROL), THEN '1' (PHASE CONTROL FUNCTIONS). SCROLL TO THE BOTTOM OF THE MENU AND ENABLE ACT LOGIC COMMANDS 1, 2, AND 3.

2. FROM MAIN MENU PRESS '6' (OUTPUTS), THEN '3' (LOGICAL I/O PROCESSOR).

```
  LOGICAL I/O COMMAND #1  (+/-COMMAND#)
IF  ACTIVE PHASE       #1  IS ON
AND RED CLEAR ON PHASE #1  IS ON

                SCROLL DOWN

THEN:
SET OUTPUT  ASSIGNMENT #50 ON
SET OUTPUT  ASSIGNMENT #51 OFF
```

NOTE: LOGIC FOR PHASE 1 RED CLEAR WHEN TRANSITIONING FROM PHASE 1 TO PHASE 2 (HEAD 11).

PRESS '+'

```
  LOGICAL I/O COMMAND #2  (+/-COMMAND#)
IF  ACTIVE PHASE       #1  IS ON

                SCROLL DOWN

THEN:
SET OUTPUT  ASSIGNMENT #52 OFF
```

NOTE: LOGIC FOR SWITCHING FLASHING YELLOW ARROW OFF DURING PHASE 1 (HEAD 11).

PRESS '+'

```
  LOGICAL I/O COMMAND #3  (+/-COMMAND#)
IF  YELLOW ON PHASE    #1  IS ON

                SCROLL DOWN

THEN:
SET OUTPUT  ASSIGNMENT #51 ON
```

NOTE: LOGIC FOR YELLOW ARROW CLEARANCE FROM PHASE 1 (HEAD 11).

LOGIC I/O PROCESSOR PROGRAMMING COMPLETE

OUTPUT REFERENCE SCHEDULE

OUTPUT 50 = Overlap A Red
OUTPUT 51 = Overlap A Yellow
OUTPUT 52 = Overlap A Green

FLASHER CIRCUIT MODIFICATION DETAIL

IN ORDER TO ENSURE THAT SIGNALS FLASH CONCURRENTLY ON THE SAME APPROACH, MAKE THE FOLLOWING FLASHER CIRCUIT CHANGES:

1. ON REAR OF PDA - REMOVE WIRE FROM TERM. T2-4 AND TERMINATE ON T2-2.
2. ON REAR OF PDA - REMOVE WIRE FROM TERM. T2-5 AND TERMINATE ON T2-3.
3. REMOVE FLASHER UNIT 2.

THE CHANGES LISTED ABOVE TIES ALL PHASES AND OVERLAPS TO FLASHER UNIT 1.

OVERLAP PROGRAMMING DETAIL FOR DEFAULT PHASING

(program controller as shown below)

FROM MAIN MENU PRESS '8' (OVERLAPS), THEN '1' (VEHICLE OVERLAP SETTINGS).

```
 PAGE 1: VEHICLE OVERLAP 'A' SETTINGS
 PHASE:          |12345678910111213141516
VEH OVL PARENTS: |XX
VEH OVL NOT VEH: |
VEH OVL NOT PED: |
VEH OVL GRN EXT: |
STARTUP COLOR:  _ RED  _ YELLOW  _ GREEN
FLASH COLORS:   _ RED  _ YELLOW  X GREEN
SELECT VEHICLE OVERLAP OPTIONS:    (Y/N)
FLASH YELLOW IN CONTROLLER FLASH?...Y
GREEN EXTENSION (0-255 SEC).........0
YELLOW CLEAR (0=PARENT,3-25.5 SEC)..0.0
RED CLEAR (0=PARENT,0.1-25.5 SEC)...0.0
OUTPUT AS PHASE # (0=NONE, 1-16)....0
```

← NOTICE GREEN FLASH

PRESS '+'

```
 PAGE 1: VEHICLE OVERLAP 'B' SETTINGS
 PHASE:          |12345678910111213141516
VEH OVL PARENTS: |   X
VEH OVL NOT VEH: |
VEH OVL NOT PED: |
VEH OVL GRN EXT: |
STARTUP COLOR:  _ RED  _ YELLOW  _ GREEN
FLASH COLORS:   _ RED  _ YELLOW  X GREEN
SELECT VEHICLE OVERLAP OPTIONS:    (Y/N)
FLASH YELLOW IN CONTROLLER FLASH?...N
GREEN EXTENSION (0-255 SEC).........0
YELLOW CLEAR (0=PARENT,3-25.5 SEC)..0.0
RED CLEAR (0=PARENT,0.1-25.5 SEC)...0.0
OUTPUT AS PHASE # (0=NONE, 1-16)....0
```

← NOTICE GREEN FLASH

PRESS '+'

```
 PAGE 1: VEHICLE OVERLAP 'C' SETTINGS
 PHASE:          |12345678910111213141516
VEH OVL PARENTS: |     X
VEH OVL NOT VEH: |
VEH OVL NOT PED: |
VEH OVL GRN EXT: |
STARTUP COLOR:  _ RED  _ YELLOW  _ GREEN
FLASH COLORS:   _ RED  _ YELLOW  X GREEN
SELECT VEHICLE OVERLAP OPTIONS:    (Y/N)
FLASH YELLOW IN CONTROLLER FLASH?...Y
GREEN EXTENSION (0-255 SEC).........0
YELLOW CLEAR (0=PARENT,3-25.5 SEC)..0.0
RED CLEAR (0=PARENT,0.1-25.5 SEC)...0.0
OUTPUT AS PHASE # (0=NONE, 1-16)....0
```

← NOTICE GREEN FLASH

OVERLAP PROGRAMMING COMPLETE

OVERLAP PROGRAMMING DETAIL FOR ALTERNATE PHASING

(program controller as shown below)

FROM MAIN MENU PRESS '8' (OVERLAPS), THEN '1' (VEHICLE OVERLAP SETTINGS). PRESS 'NEXT' TO ADVANCE TO PAGE 2.

NOTICE PAGE 2 →

```
 PAGE 2: VEHICLE OVERLAP 'A' SETTINGS
 PHASE:          |12345678910111213141516
VEH OVL PARENTS: |X
VEH OVL NOT VEH: |
VEH OVL NOT PED: |
VEH OVL GRN EXT: |
STARTUP COLOR:  _ RED  _ YELLOW  _ GREEN
FLASH COLORS:   _ RED  _ YELLOW  _ GREEN
SELECT VEHICLE OVERLAP OPTIONS:    (Y/N)
FLASH YELLOW IN CONTROLLER FLASH?...Y
GREEN EXTENSION (0-255 SEC).........0
YELLOW CLEAR (0=PARENT,3-25.5 SEC)..0.0
RED CLEAR (0=PARENT,0.1-25.5 SEC)...0.0
OUTPUT AS PHASE # (0=NONE, 1-16)....0
```

PRESS '+'

NOTICE PAGE 2 →

```
 PAGE 2: VEHICLE OVERLAP 'B' SETTINGS
 PHASE:          |12345678910111213141516
VEH OVL PARENTS: |   X
VEH OVL NOT VEH: |
VEH OVL NOT PED: |
VEH OVL GRN EXT: |
STARTUP COLOR:  _ RED  _ YELLOW  _ GREEN
FLASH COLORS:   _ RED  _ YELLOW  X GREEN
SELECT VEHICLE OVERLAP OPTIONS:    (Y/N)
FLASH YELLOW IN CONTROLLER FLASH?...N
GREEN EXTENSION (0-255 SEC).........0
YELLOW CLEAR (0=PARENT,3-25.5 SEC)..0.0
RED CLEAR (0=PARENT,0.1-25.5 SEC)...0.0
OUTPUT AS PHASE # (0=NONE, 1-16)....0
```

← NOTICE GREEN FLASH

PRESS '+'

NOTICE PAGE 2 →

```
 PAGE 2: VEHICLE OVERLAP 'C' SETTINGS
 PHASE:          |12345678910111213141516
VEH OVL PARENTS: |     X
VEH OVL NOT VEH: |
VEH OVL NOT PED: |
VEH OVL GRN EXT: |
STARTUP COLOR:  _ RED  _ YELLOW  _ GREEN
FLASH COLORS:   _ RED  _ YELLOW  X GREEN
SELECT VEHICLE OVERLAP OPTIONS:    (Y/N)
FLASH YELLOW IN CONTROLLER FLASH?...Y
GREEN EXTENSION (0-255 SEC).........0
YELLOW CLEAR (0=PARENT,3-25.5 SEC)..0.0
RED CLEAR (0=PARENT,0.1-25.5 SEC)...0.0
OUTPUT AS PHASE # (0=NONE, 1-16)....0
```

← NOTICE GREEN FLASH

OVERLAP PROGRAMMING COMPLETE

THIS ELECTRICAL DETAIL IS FOR
THE SIGNAL DESIGN: 08-0649T2
DESIGNED: JANUARY 2022
SEALED: 4/20/2022
REVISED: N/A

Temporary Design 2 - (TMP Phase I)
Electrical Detail - Sheet 2 of 4

DOCUMENT NOT CONSIDERED FINAL UNLESS ALL SIGNATURES COMPLETED

ELECTRICAL AND PROGRAMMING DETAILS FOR:

Prepared for the Offices of:

Traffic Engineering Branch, Transportation Mobility and Safety Division, NC Department of Transportation, Traffic Engineering & Signals Management Section

750 N.Greenfield Pkwy.Garner,NC 27529

NC 42 (Broadway Road)
at
SR 1529 (Cox Mill Road)
and Bill's Body Shop

Division 8 | Lee County | Sanford

PLAN DATE:	April 2022	REVIEWED BY:	Todd Joyce
PREPARED BY:	Keith M. Mims	REVIEWED BY:	-

REVISIONS	INIT.	DATE

SEAL

NORTH CAROLINA PROFESSIONAL SEAL 036880 ENGINEER KEITH M. MIMS

DocuSigned by: Keith M. Mims 04/21/2022
SIGNATURE DATE

SIG. INVENTORY NO. 08-0649T2

21-APR-2022 13:59
k:\08649_sht_01_02_xxxxxx.dgn
kmims

PROJECT REFERENCE NO.	SHEET NO.
R-3830	Sig. 19.3

INPUT PAGE 2 ASSIGNMENT PROGRAMMING DETAIL FOR ALTERNATE PHASING - LOOP 1A

(program controller as shown below)

NOTES: 1. THIS PROGRAMMING APPLIES FOR INPUT PAGE 2 ONLY. INPUT PAGE 1 WILL USE STANDARD DEFAULT SETTINGS. THIS PROGRAMMING IS NECESSARY FOR PROPER DETECTOR OPERATION DURING ALTERNATE PHASING OPERATION.

2. THE FIRST TASK THIS PROGRAMMING ACCOMPLISHES IS THE DISABLING OF INPUT #10 (DETECTOR 26) SO THAT A VEHICLE CALL WILL NOT BE PLACED TO PHASE 6 DURING ALTERNATE PHASING OPERATION. THE SECOND TASK THIS PROGRAMMING ACCOMPLISHES IS THAT IT REASSIGNS DETECTOR 51 TO INPUT #18 SO THAT THE DELAY ON LOOP 1A CAN BE REDUCED FROM 15 SECONDS TO 3 SECONDS.

FROM MAIN MENU PRESS '5' (INPUTS), THEN PRESS 'NEXT' TO GET TO INPUT PAGE '2'. PRESS THE '+' KEY UNTIL INPUT 10 IS REACHED.

```
PAGE: 2 C1 PIN:48  VEHICLE DETECTOR
INPUT ASSIGNMENT #.................10
DEBOUNCE TIME (0-25.5 SEC).........0.5
DELAY TIME (0-25.5 SEC).............0.0
HOLD-OVER TIME (0-25.5 SEC).........0.0
ASSIGNMENT SELECTION:
NOT ENABLED (Y/N)...................Y
VEHICLE DETECTOR (1-64).............26
PEDESTRIAN DETECTOR (1-16).........._
ALTERNATE PED DETECTOR (1-16)......._
PREEMPT (1-10)......................._
INVERTED PREEMPT (1-10).............._
STOP TIME (Y/N)......................_
FLASH SENSE (Y/N)...................._
DOOR OPEN (Y/N)......................_
MANUAL CONTROL ENABLE (Y/N).........._
MANUAL CONTROL ADVANCE (Y/N)........._
SPECIAL FUNCTION ALARM (1-8)........._
TOD HOUR SYCHRONIZATION (0-23)......._
FORCE OFF RING (1-4)................._
HOLD PHASES (1-16)..................._
PLAN (65=FLSH,66=FREE)..._  OFFSET#.._
CHANGE PHASE SEQUENCE PAGE (1-12)...._
CHANGE PHASE TIMING PAGE (1-4)......._
CHANGE PHASE CONTROL PAGE (1-4)....._
CHANGE OVERLAP CONTROL PAGE (1-4)...._
CHANGE INPUT PAGE (1-4).............._
CHANGE OUTPUT PAGE (1-4)............._
OVERRIDE PHASE CONTROL FUNCTION (Y)._
```

ENTER A 'Y' FOR NOT ENABLED

DEFAULT DETECTOR NUMBER WILL REMAIN UNTIL 'NOT ENABLED' IS ENTERED.

(LOOP 1A - PHASE 6)

```
PAGE: 2 C1 PIN:48  NOT ENABLED
INPUT ASSIGNMENT #.................10
DEBOUNCE TIME (0-25.5 SEC).........0.5
DELAY TIME (0-25.5 SEC).............0.0
HOLD-OVER TIME (0-25.5 SEC).........0.0
ASSIGNMENT SELECTION:
NOT ENABLED (Y/N)...................Y
VEHICLE DETECTOR (1-64).............._
PEDESTRIAN DETECTOR (1-16).........._
ALTERNATE PED DETECTOR (1-16)......._
PREEMPT (1-10)......................._
INVERTED PREEMPT (1-10).............._
STOP TIME (Y/N)......................_
FLASH SENSE (Y/N)...................._
DOOR OPEN (Y/N)......................_
MANUAL CONTROL ENABLE (Y/N).........._
MANUAL CONTROL ADVANCE (Y/N)........._
SPECIAL FUNCTION ALARM (1-8)........._
TOD HOUR SYCHRONIZATION (0-23)......._
FORCE OFF RING (1-4)................._
HOLD PHASES (1-16)..................._
PLAN (65=FLSH,66=FREE)..._  OFFSET#.._
CHANGE PHASE SEQUENCE PAGE (1-12)...._
CHANGE PHASE TIMING PAGE (1-4)......._
CHANGE PHASE CONTROL PAGE (1-4)....._
CHANGE OVERLAP CONTROL PAGE (1-4)...._
CHANGE INPUT PAGE (1-4).............._
CHANGE OUTPUT PAGE (1-4)............._
OVERRIDE PHASE CONTROL FUNCTION (Y)._
```

PRESS '+' TO ADVANCE TO INPUT 18

```
PAGE: 2 C1 PIN:56  VEHICLE DETECTOR
INPUT ASSIGNMENT #.................18
DEBOUNCE TIME (0-25.5 SEC).........0.5
DELAY TIME (0-25.5 SEC).............0.0
HOLD-OVER TIME (0-25.5 SEC).........0.0
ASSIGNMENT SELECTION:
NOT ENABLED (Y/N)...................._
VEHICLE DETECTOR (1-64).............1
PEDESTRIAN DETECTOR (1-16).........._
ALTERNATE PED DETECTOR (1-16)......._
PREEMPT (1-10)......................._
INVERTED PREEMPT (1-10).............._
STOP TIME (Y/N)......................_
FLASH SENSE (Y/N)...................._
DOOR OPEN (Y/N)......................_
MANUAL CONTROL ENABLE (Y/N).........._
MANUAL CONTROL ADVANCE (Y/N)........._
SPECIAL FUNCTION ALARM (1-8)........._
TOD HOUR SYCHRONIZATION (0-23)......._
FORCE OFF RING (1-4)................._
HOLD PHASES (1-16)..................._
PLAN (65=FLSH,66=FREE)..._  OFFSET#.._
CHANGE PHASE SEQUENCE PAGE (1-12)...._
CHANGE PHASE TIMING PAGE (1-4)......._
CHANGE PHASE CONTROL PAGE (1-4)....._
CHANGE OVERLAP CONTROL PAGE (1-4)...._
CHANGE INPUT PAGE (1-4).............._
CHANGE OUTPUT PAGE (1-4)............._
OVERRIDE PHASE CONTROL FUNCTION (Y)._
```

ENTER '51' TO REASSIGN THE VEHICLE DETECTOR FOR THIS INPUT

(LOOP 1A - PHASE 1)

```
PAGE: 2 C1 PIN:56  VEHICLE DETECTOR
INPUT ASSIGNMENT #.................18
DEBOUNCE TIME (0-25.5 SEC).........0.5
DELAY TIME (0-25.5 SEC).............0.0
HOLD-OVER TIME (0-25.5 SEC).........0.0
ASSIGNMENT SELECTION:
NOT ENABLED (Y/N)...................._
VEHICLE DETECTOR (1-64).............51
PEDESTRIAN DETECTOR (1-16).........._
ALTERNATE PED DETECTOR (1-16)......._
PREEMPT (1-10)......................._
INVERTED PREEMPT (1-10).............._
STOP TIME (Y/N)......................_
FLASH SENSE (Y/N)...................._
DOOR OPEN (Y/N)......................_
MANUAL CONTROL ENABLE (Y/N).........._
MANUAL CONTROL ADVANCE (Y/N)........._
SPECIAL FUNCTION ALARM (1-8)........._
TOD HOUR SYCHRONIZATION (0-23)......._
FORCE OFF RING (1-4)................._
HOLD PHASES (1-16)..................._
PLAN (65=FLSH,66=FREE)..._  OFFSET#.._
CHANGE PHASE SEQUENCE PAGE (1-12)...._
CHANGE PHASE TIMING PAGE (1-4)......._
CHANGE PHASE CONTROL PAGE (1-4)....._
CHANGE OVERLAP CONTROL PAGE (1-4)...._
CHANGE INPUT PAGE (1-4).............._
CHANGE OUTPUT PAGE (1-4)............._
OVERRIDE PHASE CONTROL FUNCTION (Y)._
```

PROGRAMMING COMPLETE

SPECIAL DETECTOR PROGRAMMING DETAIL - LOOP 1A (ALT.)

(program controller as shown below)

FROM MAIN MENU PRESS '7' (DETECTORS), THEN PRESS '1' FOR VEHICLE DETECTORS. PRESS THE '-' KEY TO GET TO VEHICLE DETECTOR #51.

```
VEHICLE DETECTOR #51  SETTINGS (+-.1-64)
SETTING:                          (Y/N)
ENABLE DETECTOR.....................N
ENABLE LOGGING......................N
ENABLE DIAGNOSTICS..................N
SPEED TRAP..........................N
CALL DETECTOR.......................Y
EXTENSION DETECTOR..................Y
MODE 2 STOP BAR.....................N
SWITCHING DETECTOR..................N
DUPLICATING DETECTOR................N
ENABLE FULL TIME DELAY..............N
IF FAILED, SET MIN RECALL?..........N
IF FAILED, SET MAX1 RECALL?.........N
IF FAILED, SET MAX2 RECALL?.........N
PHASE#           ¦1234567891011121314 1516
PHASES ASSIGNED ¦
SWITCH/DUPLICATE¦
LOOP SIZE (0-255 FT)................6
SPEED TRAP DISTANCE (0-255 FT)......0
STOP BAR TIME (0-255 SEC)...........0
STRETCH (0-25.5 SEC)................0.0
DELAY (0-255 SEC)...................0
MAX CALLS/MIN (0-255)..............255
MIN CALLS/DIAGNOSTIC PERIOD (0-255).0
MAX OCCUPANCY (0-100%)..............100
EXTENSION DISABLE TIME (0-255 SEC)..0
QUEUE MAX OCCUPANCY TIME (0-255)....0
QUEUE GAP RESET TIME (0-25.5).......0.0
PREEMPTION INDEX FOR QUEUE (0-10)...0
```

ENTER 'Y' FOR ENABLE DETECTOR

ENTER '1' FOR PHASES ASSIGNED

ENSURE DELAY IS '3'

```
VEHICLE DETECTOR #51  SETTINGS (+-.1-64)
SETTING:                          (Y/N)
ENABLE DETECTOR.....................Y
ENABLE LOGGING......................N
ENABLE DIAGNOSTICS..................N
SPEED TRAP..........................N
CALL DETECTOR.......................Y
EXTENSION DETECTOR..................Y
MODE 2 STOP BAR.....................N
SWITCHING DETECTOR..................N
DUPLICATING DETECTOR................N
ENABLE FULL TIME DELAY..............N
IF FAILED, SET MIN RECALL?..........N
IF FAILED, SET MAX1 RECALL?.........N
IF FAILED, SET MAX2 RECALL?.........N
PHASE#           ¦1234567891011121314 1516
PHASES ASSIGNED ¦X
SWITCH/DUPLICATE¦
LOOP SIZE (0-255 FT)................6
SPEED TRAP DISTANCE (0-255 FT)......0
STOP BAR TIME (0-255 SEC)...........0
STRETCH (0-25.5 SEC)................0.0
DELAY (0-255 SEC)...................3
MAX CALLS/MIN (0-255)..............255
MIN CALLS/DIAGNOSTIC PERIOD (0-255).0
MAX OCCUPANCY (0-100%)..............100
EXTENSION DISABLE TIME (0-255 SEC)..0
QUEUE MAX OCCUPANCY TIME (0-255)....0
QUEUE GAP RESET TIME (0-25.5).......0.0
PREEMPTION INDEX FOR QUEUE (0-10)...0
```

DETECTOR PROGRAMMING COMPLETE

NOTE: DETECTOR IS PROGRAMMED PER THE INPUT FILE CONNECTION AND PROGRAMMING CHART SHOWN ON SHEET 1.

THIS ELECTRICAL DETAIL IS FOR
THE SIGNAL DESIGN: 08-0649T2
DESIGNED: JANUARY 2022
SEALED: 4/20/2022
REVISED: N/A

Temporary Design 2 - (TMP Phase I)
Electrical Detail - Sheet 3 of 4

DOCUMENT NOT CONSIDERED FINAL UNLESS ALL SIGNATURES COMPLETED

ELECTRICAL AND PROGRAMMING DETAILS FOR:

Prepared for the Offices of:
NC Department of Transportation Mobility and Safety Division Traffic Engineering Branch Traffic Control & Signals Management Section
750 N.Greenfield Pkwy.Garner,NC 27529

NC 42 (Broadway Road)
at
SR 1529 (Cox Mill Road)
and Bill's Body Shop

Division 8 Lee County Sanford

PLAN DATE: April 2022 REVIEWED BY: Todd Joyce
PREPARED BY: Keith M. Mims REVIEWED BY: -

REVISIONS	INIT.	DATE

SEAL
NORTH CAROLINA PROFESSIONAL SEAL 036880 ENGINEER KEITH M. MIMS
DocuSigned by: Keith M. Mims 04/21/2022
SIGNATURE DATE
SIG. INVENTORY NO. 08-0649T2

21-APR-2022 13:59
K:\Projects\08-0649_SHL\810c72_xxxxxx.dgn
kmims

PROJECT REFERENCE NO.	SHEET NO.
R-3830	Sig. 19.4

ALTERNATE PHASING ACTIVATION DETAIL

TO RUN ALT. PHASING DURING COORDINATION - SELECT ALL PAGE CHANGES (AS SHOWN BELOW) WITHIN COORDINATION PLAN PROGRAMMING.

TO RUN ALT. PHASING DURING FREE RUN - PROGRAM PAGE CHANGES (SHOWN BELOW) IN SEPARATE TIME OF DAY EVENTS. IF PAGE 1 IS USED, NO EVENT PROGRAMMING IS NECESSARY FOR THAT PARTICULAR PAGE.

PHASING	INPUTS PAGE	OVERLAPS PAGE
ACTIVE PAGES REQUIRED TO RUN DEFAULT PHASING	1	1
ACTIVE PAGES REQUIRED TO RUN ALTERNATE PHASING	2	2

NOTE: PAGES NOT SHOWN (i.e. sequence, phase control, etc.) SHOULD REMAIN AS '1', OR AS DEFINED BY TIMING ENGINEER.

IMPORTANT: IF ALT. PHASING IS USED DURING FREE RUN AND COORDINATION, DO NOT OPERATE TIME OF DAY PAGE CHANGE EVENTS CONCURRENTLY WITH COORDINATION PLAN EVENTS IN THE EVENT SCHEDULER. (EX. FREE RUN PAGE CHANGE EVENT SHOULD END BEFORE COORDINATION PLAN EVENT STARTS AND VICE-VERSA).

ALTERNATE PHASING PAGE CHANGE SUMMARY

THE FOLLOWING IS A SUMMARY OF WHAT TAKES PLACE WHEN THESE OVERLAP/INPUT PAGE CHANGES ACTIVATE TO CALL THE "ALTERNATE PHASING":

OVERLAPS PAGE 2: Modifies overlap parent phases for head 11 to run protected turns only.

INPUTS PAGE 2: Disables phase 6 call on loop 1A and reduces delay time for phase 1 call on loop 1A to 3 seconds.

THIS ELECTRICAL DETAIL IS FOR THE SIGNAL DESIGN: 08-0649T2
DESIGNED: JANUARY 2022
SEALED: 4/20/2022
REVISED: N/A

Temporary Design 2 - (TMP Phase I)
Electrical Detail - Sheet 4 of 4

DOCUMENT NOT CONSIDERED FINAL UNLESS ALL SIGNATURES COMPLETED

ELECTRICAL AND PROGRAMMING DETAILS FOR:

Prepared for the Offices of:
Transportation Mobility and Safety Division
STATE OF NORTH CAROLINA
DEPARTMENT OF TRANSPORTATION
Signals Management Section
750 N.Greenfield Pkwy,Garner,NC 27529

NC 42 (Broadway Road)
at
SR 1529 (Cox Mill Road)
and Bill's Body Shop

Division 8 Lee County Sanford

PLAN DATE:	April 2022	REVIEWED BY:	Todd Joyce
PREPARED BY:	Keith M. Mims	REVIEWED BY:	-

REVISIONS	INIT.	DATE

SEAL

NORTH CAROLINA PROFESSIONAL SEAL 036880 ENGINEER KEITH M. MIMS

DocuSigned by: Keith M. Mims 04/21/2022
SIGNATURE DATE

SIG. INVENTORY NO. 08-0649T2

21-APR-2022 14:00
.w080649_sm_ele_t2_xxxxxx.dgn
kmmims

PROJECT REFERENCE NO.	SHEET NO.
R-3830	SIG-20.0

DEFAULT PHASING DIAGRAM

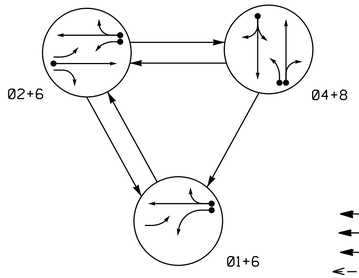

ALTERNATE PHASING DIAGRAM

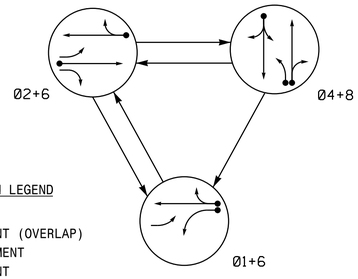

PHASING DIAGRAM DETECTION LEGEND

- DETECTED MOVEMENT
- UNDETECTED MOVEMENT (OVERLAP)
- UNSIGNALIZED MOVEMENT
- PEDESTRIAN MOVEMENT

DEFAULT PHASING TABLE OF OPERATION

SIGNAL FACE	PHASE 01+6	PHASE 02+6	PHASE 04+8	PHASE FLASH
11	←	~~F Y~~	~~R~~	~~Y~~
21	~~F Y~~	~~F Y~~	~~R~~	~~Y~~
22, 23	R	G	R	Y
41, 42	R	R	G	R
61, 62	G	G	R	Y
81	~~R~~	~~R~~	~~F Y~~	~~R~~
82, 83, 84	R	R	G	R

ALTERNATE PHASING TABLE OF OPERATION

SIGNAL FACE	PHASE 01+6	PHASE 02+6	PHASE 04+8	PHASE FLASH
11	←	~~R~~	~~R~~	~~Y~~
21	~~F Y~~	~~F Y~~	~~R~~	~~Y~~
22, 23	R	G	R	Y
41, 42	R	R	G	R
61, 62	G	G	R	Y
81	~~R~~	~~R~~	~~F Y~~	~~R~~
82, 83, 84	R	R	G	R

OASIS 2070 LOOP & DETECTOR INSTALLATION CHART

INDUCTIVE LOOPS					DETECTOR PROGRAMMING							
ZONE	SIZE (FT)	DISTANCE FROM STOPBAR (FT)	TURNS	NEW LOOP	PHASE	CALLING	EXTENSION	FULL TIME DELAY	STRETCH TIME	DELAY TIME	SYSTEM LOOP	NEW CARD
1A	6X40	0	✳	✳	1	Y	Y	-	-	★15	-	✳
					#6	Y	Y	Y	-	3	-	✳
2A	6X6	300	✳	✳	2	Y	Y	-	-	-	-	✳
4A	6X15	0	✳	✳	4	Y	Y	-	-	10	-	✳
6A	6X6	300	✳	✳	6	Y	Y	-	-	-	-	✳
8A	6X40	0	✳	✳	8	Y	Y	-	-	3	-	✳
8B	6X40	0	✳	✳	8	Y	Y	-	-	10	-	✳

✳ Video Detection Zone
★ Reduce Delay to 3 sec during Alternate Phasing Operation.
Disable Phase(s) call during Alternate Phasing Operation.

3 Phase
Fully Acutated
(Isolated)

NOTES

1. Refer to "Roadway Standard Drawings NCDOT" dated January 2018 and "Standard Specifications for Roads and Structures" dated January 2018.
2. Do not program signal for late night flashing operation unless otherwise directed by the Engineer.
3. Phase 1 may be lagged.
4. Reposition existing signal heads numbered 11, 21, 22, 23, 61, and 62.
5. Set all detector units to presence mode.
6. The Division Traffic Engineer will determine the hours of use for each phasing plan.
7. This intersection uses video detection. Install detectors according to the manufacturer's instructions to achieve the desired detection.

LEGEND

PROPOSED		EXISTING
○→	Traffic Signal Head	●→
◐→	Modified Signal Head	N/A
⊣	Sign	⊣
▭↓	Pedestrian Signal Head With Push Button & Sign	■↓
○	Signal Pole with Guy	●→
○↷	Signal Pole with Sidewalk Guy	●↓
▭	Inductive Loop Detector	▭
⊠	Controller & Cabinet	⛶
□	Junction Box	■
·····	2-in Underground Conduit	·····
N/A	Right of Way	———
→	Directional Arrow	→
●—	Construction Zone Drums	●—
▭	Construction Zone	▭
▬	Video Detection Zone	▬

OASIS 2070 TIMING CHART

FEATURE	PHASE 1	PHASE 2	PHASE 4	PHASE 6	PHASE 8
Min Green 1 *	7	12	7	12	7
Extension 1 *	2.0	6.0	2.0	6.0	2.0
Max Green 1 *	20	90	25	90	25
Yellow Clearance	3.0	4.5	3.0	4.5	3.0
Red Clearance	1.9	1.2	2.3	1.2	2.3
Red Revert	2.0	2.0	2.0	2.0	2.0
Walk 1 *	-	-	-	-	-
Don't Walk 1	-	-	-	-	-
Seconds Per Actuation *	-	2.5	-	2.5	-
Max Variable Initial *	-	34	-	34	-
Time Before Reduction *	-	15	-	15	-
Time To Reduce *	-	30	-	30	-
Minimum Gap	-	3.2	-	3.2	-
Recall Mode	-	MIN RECALL	-	MIN RECALL	-
Vehicle Call Memory	-	YELLOW	-	YELLOW	-
Dual Entry	-	-	ON	-	ON
Simultaneous Gap	ON	ON	ON	ON	ON

* These values may be field adjusted. Do not adjust Min Green and Extension times for phases 2 and 6 lower than what is shown. Min Green for all other phases should not be lower than 4 seconds.

SIGNAL FACE I.D.

All Heads L.E.D.

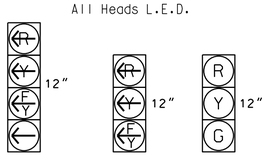

11
21
81
22, 23
41, 42
61, 62
82, 83, 84

Signal Upgrade -
Temporary Design 3 (TMP Phase II)

DOCUMENT NOT CONSIDERED FINAL UNLESS ALL SIGNATURES COMPLETED

Prepared in the Offices of:
Transportation Mobility and Safety Division
Signal Design Section
750 N.Greenfield Pkwy.Garner,NC 27529

NC 42 (Broadway Road)
at
SR 1529 (Cox Mill Road)
and Bill's Body Shop

Division 8 Lee County Sanford

PLAN DATE: January 2022 REVIEWED BY:
PREPARED BY: J.A. Lohr REVIEWED BY:

REVISIONS	INIT.	DATE

SCALE 0 40 1"=40'

SEAL
NORTH CAROLINA PROFESSIONAL SEAL 026486 ENGINEER ROBERT J. ZIEMBA
DocuSigned by: 04/20/2022
DATE
SIG. INVENTORY NO. 08-0649T3

$$$$$$$STSDATE$$$$$$
20-APR-2022 07:35
K:\Projects\R-3830_Sig_Rev_2022mmsd.dgn
jalohr

PROJECT REFERENCE NO.	SHEET NO.
R-3830	Sig. 20.1

EDI MODEL 2018ECL-NC CONFLICT MONITOR PROGRAMMING DETAIL

(remove jumpers and set switches as shown)

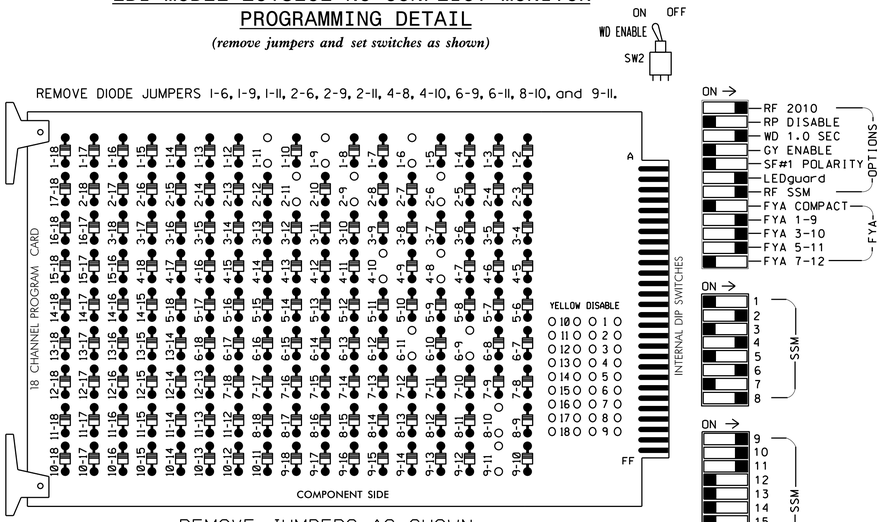

REMOVE JUMPERS AS SHOWN

NOTES:

1. Card is provided with all diode jumpers in place. Removal of any jumper allows its channels to run concurrently.
2. Ensure jumpers SEL2-SEL5 and SEL9 are present on the monitor board.
3. Ensure that Red Enable is active at all times during normal operation.
4. Connect serial cable from conflict monitor to comm. port 1 of 2070 controller. Ensure conflict monitor communicates with 2070.

■ = DENOTES POSITION OF SWITCH

NOTES

1. To prevent "flash-conflict" problems, insert red flash program blocks for all unused vehicle load switches in the output file. The installer shall verify that signal heads flash in accordance with the Signal Plans.
2. Program phases 4 and 8 for Dual Entry.
3. Enable Simultaneous Gap-Out for all Phases.
4. Program phases 2 and 6 for Variable Initial and Gap Reduction.
5. Program phases 2 and 6 for Startup In Green.
6. Program phases 2 and 6 for Yellow Flash, and overlaps 1 and 2 as Wag Overlaps.
7. If this signal will be managed by an ATMS software, enable controller and detector logging for all detectors used at this location.

EQUIPMENT INFORMATION

CONTROLLER.....2070
CABINET.....332 W/ AUX
SOFTWARE.....ECONOLITE OASIS
CABINET MOUNT.....BASE
OUTPUT FILE POSITIONS...18 WITH AUX. OUTPUT FILE
LOAD SWITCHES USED.....S1,S2,S5,S8,S11,AUXS1,AUXS2,AUXS4
PHASES USED.....1,2,4,6,8
OVERLAP "A".....1+2
OVERLAP "B".....4
OVERLAP "C".....6
OVERLAP "D".....NOT USED

SIGNAL HEAD HOOK-UP CHART

LOAD SWITCH NO.	S1	S2	S3	S4	S5	S6	S7	S8	S9	S10	S11	S12	AUX S1	AUX S2	AUX S3	AUX S4	AUX S5	AUX S6
CMU CHANNEL NO.	1	2	13	3	4	14	5	6	15	7	8	16	9	10	17	11	12	18
PHASE	1	2	2 PED	3	4	4 PED	5	6	6 PED	7	8	8 PED	OLA	OLB	SPARE	OLC	OLD	SPARE
SIGNAL HEAD NO.	11★	22,23	NU	NU	41,42	NU	NU	61,62	NU	NU	82,83 84	NU	11★	81★	NU	21★	NU	NU
RED		128			101			134			107							
YELLOW	✳	129			102			135			108							
GREEN		130			103			136			109							
RED ARROW													A121	A124		A114		
YELLOW ARROW													A122	A125		A115		
FLASHING YELLOW ARROW													A123	A126		A116		
GREEN ARROW	127																	

NU = Not Used

✳ Denotes install load resistor. See load resistor installation detail this sheet.

★ See pictorial of head wiring in detail this sheet.

FYA SIGNAL WIRING DETAIL

(wire signal heads as shown)

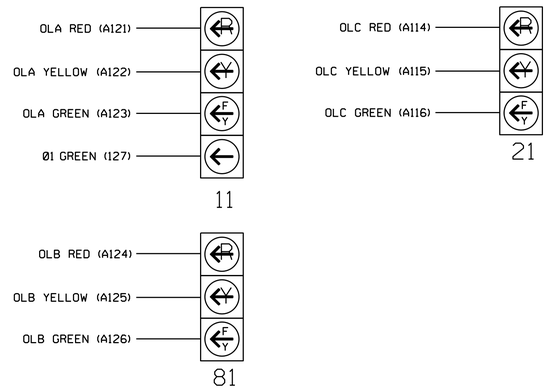

NOTE

The sequence display for signal head 11 requires special logic programming. See sheet 2 for programming instructions.

INPUT FILE POSITION LAYOUT

(front view)

		1	2	3	4	5	6	7	8	9	10	11	12	13	14
FILE "I"	U	Ø 1 1A NOT USED	SLOT EMPTY	SLOT EMPTY	SLOT EMPTY	SLOT EMPTY	SLOT EMPTY	SLOT EMPTY	SLOT EMPTY	SLOT EMPTY	SLOT EMPTY	SLOT EMPTY	SLOT EMPTY	SLOT EMPTY	FS DC ISOLATOR
	L														ST DC ISOLATOR
FILE "J"	U	SLOT EMPTY	SLOT EMPTY	SLOT EMPTY	WIRED ⊗ INPUT	SLOT EMPTY	SLOT EMPTY	SLOT EMPTY	SLOT EMPTY	SLOT EMPTY	SLOT EMPTY	SLOT EMPTY	SLOT EMPTY	SLOT EMPTY	SLOT EMPTY
	L														

EX.: 1A, 2A, ETC. = LOOP NO.'S

FS = FLASH SENSE
ST = STOP TIME

⊗ Wired Input - Do not populate slot with detector card

INPUT FILE CONNECTION & PROGRAMMING CHART

LOOP NO.	LOOP TERMINAL	INPUT FILE POS.	PIN NO.	INPUT ASSIGNMENT NO.	DETECTOR NO.	NEMA PHASE	CALL	EXTEND	FULL TIME DELAY	STRETCH TIME	DELAY TIME
1A[1]	TB2-1,2	I1U	56	18	1	1	Y	Y			15
	-	J4U	48	10★	26	6	Y	Y	Y		3
	-	I1U	56	18★	51	1	Y	Y			3

[1] Add jumper from I1-W to J4-W, on rear of input file.

★ See Input Page Assignment programming details on sheet 3.

INPUT FILE POSITION LEGEND: J2L
FILE J
SLOT 2
LOWER

LOAD RESISTOR INSTALLATION DETAIL

(install resistor as shown below)

ACCEPTABLE VALUES	
VALUE (ohms)	WATTAGE
1.5K - 1.9K	25W (min)
2.0K - 3.0K	10W (min)

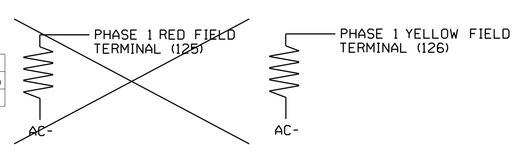

REMOVE, IF PRESENT

DETECTOR NOTES

1. For all loops install a video detection system for vehicle detection. Perform installation according to manufacturer's directions and NCDOT engineer-approved mounting locations to accomplish the detection schemes shown on the Signal Design Plans.
2. For loop 1A, detector card placement and slot reserved for wired input are typical for a NCDOT installation. Input associated with this slot are compatible with time of day instructions located on sheet 3 of this electrical detail.

THIS ELECTRICAL DETAIL IS FOR
THE SIGNAL DESIGN: 08-0649T3
DESIGNED: JANUARY 2022
SEALED: 4/20/2022
REVISED: N/A

Temporary Design 3 - (TMP Phase II)
Electrical Detail - Sheet 1 of 4

DOCUMENT NOT CONSIDERED FINAL UNLESS ALL SIGNATURES COMPLETED

ELECTRICAL AND PROGRAMMING DETAILS FOR:

Prepared for the Offices of:
NCDOT Transportation Mobility and Safety Division
Traffic Engineering Branch
Signals Management Section

750 N.Greenfield Pkwy.Garner,NC 27529

NC 42 (Broadway Road)
at
SR 1529 (Cox Mill Road)
and Bill's Body Shop

Division 8 Lee County Sanford

PLAN DATE:	April 2022	REVIEWED BY:	Todd Joyce
PREPARED BY:	Keith M. Mims	REVIEWED BY:	-

REVISIONS	INIT.	DATE

SEAL
NORTH CAROLINA PROFESSIONAL SEAL 036880 ENGINEER KEITH M. MIMS
DocuSigned by: Keith M. Mims
Signature
04/21/2022
DATE

SIG. INVENTORY NO. 08-0649T3

21-APR-2022 14:10
S:\Traffic Signals\Workgroups\Sig Mgmt\Projects From Signal Design\Active Projects\Mims\In-house\08-0649T3\80649_sm_ele_t3_xxxxxx.dgn
kmims

PROJECT REFERENCE NO.	SHEET NO.
R-3830	Sig.20.2

LOGICAL I/O PROCESSOR PROGRAMMING DETAIL TO PRODUCE SPECIAL FYA-PPLT SIGNAL SEQUENCE

(program controller as shown below)

1. FROM MAIN MENU PRESS '2' (PHASE CONTROL), THEN '1' (PHASE CONTROL FUNCTIONS). SCROLL TO THE BOTTOM OF THE MENU AND ENABLE ACT LOGIC COMMANDS 1, 2, AND 3.

2. FROM MAIN MENU PRESS '6' (OUTPUTS), THEN '3' (LOGICAL I/O PROCESSOR).

```
  LOGICAL I/O COMMAND #1  (+/-COMMAND#)
IF  ACTIVE PHASE       #1  IS ON
AND RED CLEAR ON PHASE #1  IS ON

                SCROLL DOWN

THEN:
SET OUTPUT  ASSIGNMENT #50 ON
SET OUTPUT  ASSIGNMENT #51 OFF
```

NOTE: LOGIC FOR PHASE 1 RED CLEAR WHEN TRANSITIONING FROM PHASE 1 TO PHASE 2 (HEAD 11).

PRESS '+'

```
  LOGICAL I/O COMMAND #2  (+/-COMMAND#)
IF  ACTIVE PHASE       #1  IS ON

                SCROLL DOWN

THEN:
SET OUTPUT  ASSIGNMENT #52 OFF
```

NOTE: LOGIC FOR SWITCHING FLASHING YELLOW ARROW OFF DURING PHASE 1 (HEAD 11).

PRESS '+'

```
  LOGICAL I/O COMMAND #3  (+/-COMMAND#)
IF  YELLOW ON PHASE    #1  IS ON

                SCROLL DOWN

THEN:
SET OUTPUT  ASSIGNMENT #51 ON
```

NOTE: LOGIC FOR YELLOW ARROW CLEARANCE FROM PHASE 1 (HEAD 11).

LOGIC I/O PROCESSOR PROGRAMMING COMPLETE

OUTPUT REFERENCE SCHEDULE

OUTPUT 50 = Overlap A Red
OUTPUT 51 = Overlap A Yellow
OUTPUT 52 = Overlap A Green

FLASHER CIRCUIT MODIFICATION DETAIL

IN ORDER TO ENSURE THAT SIGNALS FLASH CONCURRENTLY ON THE SAME APPROACH, MAKE THE FOLLOWING FLASHER CIRCUIT CHANGES:

1. ON REAR OF PDA - REMOVE WIRE FROM TERM. T2-4 AND TERMINATE ON T2-2.
2. ON REAR OF PDA - REMOVE WIRE FROM TERM. T2-5 AND TERMINATE ON T2-3.
3. REMOVE FLASHER UNIT 2.

THE CHANGES LISTED ABOVE TIES ALL PHASES AND OVERLAPS TO FLASHER UNIT 1.

OVERLAP PROGRAMMING DETAIL FOR DEFAULT PHASING

(program controller as shown below)

FROM MAIN MENU PRESS '8' (OVERLAPS), THEN '1' (VEHICLE OVERLAP SETTINGS).

```
 PAGE 1: VEHICLE OVERLAP 'A' SETTINGS
 PHASE:          |12345678910111213141516
VEH OVL PARENTS: |XX
VEH OVL NOT VEH: |
VEH OVL NOT PED: |
VEH OVL GRN EXT: |
STARTUP COLOR:  _ RED  _ YELLOW  _ GREEN
FLASH COLORS:   _ RED  _ YELLOW  X GREEN
SELECT VEHICLE OVERLAP OPTIONS:    (Y/N)
FLASH YELLOW IN CONTROLLER FLASH?...Y
GREEN EXTENSION (0-255 SEC).........0
YELLOW CLEAR (0=PARENT,3-25.5 SEC)..0.0
RED CLEAR (0=PARENT,0.1-25.5 SEC)...0.0
OUTPUT AS PHASE # (0=NONE, 1-16)....0
```

NOTICE GREEN FLASH

PRESS '+'

```
 PAGE 1: VEHICLE OVERLAP 'B' SETTINGS
 PHASE:          |12345678910111213141516
VEH OVL PARENTS: |   X
VEH OVL NOT VEH: |
VEH OVL NOT PED: |
VEH OVL GRN EXT: |
STARTUP COLOR:  _ RED  _ YELLOW  _ GREEN
FLASH COLORS:   _ RED  _ YELLOW  X GREEN
SELECT VEHICLE OVERLAP OPTIONS:    (Y/N)
FLASH YELLOW IN CONTROLLER FLASH?...N
GREEN EXTENSION (0-255 SEC).........0
YELLOW CLEAR (0=PARENT,3-25.5 SEC)..0.0
RED CLEAR (0=PARENT,0.1-25.5 SEC)...0.0
OUTPUT AS PHASE # (0=NONE, 1-16)....0
```

NOTICE GREEN FLASH

PRESS '+'

```
 PAGE 1: VEHICLE OVERLAP 'C' SETTINGS
 PHASE:          |12345678910111213141516
VEH OVL PARENTS: |     X
VEH OVL NOT VEH: |
VEH OVL NOT PED: |
VEH OVL GRN EXT: |
STARTUP COLOR:  _ RED  _ YELLOW  _ GREEN
FLASH COLORS:   _ RED  _ YELLOW  X GREEN
SELECT VEHICLE OVERLAP OPTIONS:    (Y/N)
FLASH YELLOW IN CONTROLLER FLASH?...Y
GREEN EXTENSION (0-255 SEC).........0
YELLOW CLEAR (0=PARENT,3-25.5 SEC)..0.0
RED CLEAR (0=PARENT,0.1-25.5 SEC)...0.0
OUTPUT AS PHASE # (0=NONE, 1-16)....0
```

NOTICE GREEN FLASH

OVERLAP PROGRAMMING COMPLETE

OVERLAP PROGRAMMING DETAIL FOR ALTERNATE PHASING

(program controller as shown below)

FROM MAIN MENU PRESS '8' (OVERLAPS), THEN '1' (VEHICLE OVERLAP SETTINGS). PRESS 'NEXT' TO ADVANCE TO PAGE 2.

NOTICE PAGE 2 →

```
 PAGE 2: VEHICLE OVERLAP 'A' SETTINGS
 PHASE:          |12345678910111213141516
VEH OVL PARENTS: |X
VEH OVL NOT VEH: |
VEH OVL NOT PED: |
VEH OVL GRN EXT: |
STARTUP COLOR:  _ RED  _ YELLOW  _ GREEN
FLASH COLORS:   _ RED  _ YELLOW  _ GREEN
SELECT VEHICLE OVERLAP OPTIONS:    (Y/N)
FLASH YELLOW IN CONTROLLER FLASH?...Y
GREEN EXTENSION (0-255 SEC).........0
YELLOW CLEAR (0=PARENT,3-25.5 SEC)..0.0
RED CLEAR (0=PARENT,0.1-25.5 SEC)...0.0
OUTPUT AS PHASE # (0=NONE, 1-16)....0
```

PRESS '+'

NOTICE PAGE 2 →

```
 PAGE 2: VEHICLE OVERLAP 'B' SETTINGS
 PHASE:          |12345678910111213141516
VEH OVL PARENTS: |   X
VEH OVL NOT VEH: |
VEH OVL NOT PED: |
VEH OVL GRN EXT: |
STARTUP COLOR:  _ RED  _ YELLOW  _ GREEN
FLASH COLORS:   _ RED  _ YELLOW  X GREEN
SELECT VEHICLE OVERLAP OPTIONS:    (Y/N)
FLASH YELLOW IN CONTROLLER FLASH?...N
GREEN EXTENSION (0-255 SEC).........0
YELLOW CLEAR (0=PARENT,3-25.5 SEC)..0.0
RED CLEAR (0=PARENT,0.1-25.5 SEC)...0.0
OUTPUT AS PHASE # (0=NONE, 1-16)....0
```

NOTICE GREEN FLASH

PRESS '+'

NOTICE PAGE 2 →

```
 PAGE 2: VEHICLE OVERLAP 'C' SETTINGS
 PHASE:          |12345678910111213141516
VEH OVL PARENTS: |     X
VEH OVL NOT VEH: |
VEH OVL NOT PED: |
VEH OVL GRN EXT: |
STARTUP COLOR:  _ RED  _ YELLOW  _ GREEN
FLASH COLORS:   _ RED  _ YELLOW  X GREEN
SELECT VEHICLE OVERLAP OPTIONS:    (Y/N)
FLASH YELLOW IN CONTROLLER FLASH?...Y
GREEN EXTENSION (0-255 SEC).........0
YELLOW CLEAR (0=PARENT,3-25.5 SEC)..0.0
RED CLEAR (0=PARENT,0.1-25.5 SEC)...0.0
OUTPUT AS PHASE # (0=NONE, 1-16)....0
```

NOTICE GREEN FLASH

OVERLAP PROGRAMMING COMPLETE

THIS ELECTRICAL DETAIL IS FOR
THE SIGNAL DESIGN: 08-0649T3
DESIGNED: JANUARY 2022
SEALED: 4/20/2022
REVISED: N/A

Temporary Design 3 - (TMP Phase II)
Electrical Detail - Sheet 2 of 4

DOCUMENT NOT CONSIDERED FINAL UNLESS ALL SIGNATURES COMPLETED

ELECTRICAL AND PROGRAMMING DETAILS FOR:

Prepared for the Offices of:

Traffic Engineering Branch, Transportation Mobility and Safety Division, North Carolina Department of Transportation, Traffic Engineering & Signals Management Section

750 N.Greenfield Pkwy.Garner,NC 27529

NC 42 (Broadway Road)
at
SR 1529 (Cox Mill Road)
and Bill's Body Shop

Division 8 | Lee County | Sanford

PLAN DATE: April 2022 | REVIEWED BY: Todd Joyce

PREPARED BY: Keith M. Mims | REVIEWED BY: -

REVISIONS	INIT.	DATE

SEAL

NORTH CAROLINA PROFESSIONAL SEAL 036880 ENGINEER KEITH M. MIMS

DocuSigned by: Keith M. Mims 04/21/2022
SIGNATURE DATE

SIG. INVENTORY NO. 08-0649T3

21-APR-2022 14:11
k:\08649t3_sht_01_15_xxxxxx.dgn
kmims

PROJECT REFERENCE NO.	SHEET NO.
R-3830	Sig. 20.3

INPUT PAGE 2 ASSIGNMENT PROGRAMMING DETAIL FOR ALTERNATE PHASING - LOOP 1A

(program controller as shown below)

NOTES: 1. THIS PROGRAMMING APPLIES FOR INPUT PAGE 2 ONLY. INPUT PAGE 1 WILL USE STANDARD DEFAULT SETTINGS. THIS PROGRAMMING IS NECESSARY FOR PROPER DETECTOR OPERATION DURING ALTERNATE PHASING OPERATION.

2. THE FIRST TASK THIS PROGRAMMING ACCOMPLISHES IS THE DISABLING OF INPUT #10 (DETECTOR 26) SO THAT A VEHICLE CALL WILL NOT BE PLACED TO PHASE 6 DURING ALTERNATE PHASING OPERATION. THE SECOND TASK THIS PROGRAMMING ACCOMPLISHES IS THAT IT REASSIGNS DETECTOR 51 TO INPUT #18 SO THAT THE DELAY ON LOOP 1A CAN BE REDUCED FROM 15 SECONDS TO 3 SECONDS.

FROM MAIN MENU PRESS '5' (INPUTS), THEN PRESS 'NEXT' TO GET TO INPUT PAGE '2'. PRESS THE '+' KEY UNTIL INPUT 10 IS REACHED.

```
PAGE: 2 C1 PIN:48  VEHICLE DETECTOR
INPUT ASSIGNMENT #.................10
DEBOUNCE TIME (0-25.5 SEC).........0.5
DELAY TIME (0-25.5 SEC).............0.0
HOLD-OVER TIME (0-25.5 SEC).........0.0
ASSIGNMENT SELECTION:
NOT ENABLED (Y/N)...................Y
VEHICLE DETECTOR (1-64).............26
PEDESTRIAN DETECTOR (1-16).........._
ALTERNATE PED DETECTOR (1-16)......._
PREEMPT (1-10)......................._
INVERTED PREEMPT (1-10).............._
STOP TIME (Y/N)......................_
FLASH SENSE (Y/N)...................._
DOOR OPEN (Y/N)......................_
MANUAL CONTROL ENABLE (Y/N).........._
MANUAL CONTROL ADVANCE (Y/N)........._
SPECIAL FUNCTION ALARM (1-8)........_
TOD HOUR SYCHRONIZATION (0-23)......_
FORCE OFF RING (1-4)................_
HOLD PHASES (1-16)..................._
PLAN (65=FLSH,66=FREE)..._  OFFSET#.._
CHANGE PHASE SEQUENCE PAGE (1-12)...._
CHANGE PHASE TIMING PAGE (1-4)......._
CHANGE PHASE CONTROL PAGE (1-4)......_
CHANGE OVERLAP CONTROL PAGE (1-4)...._
CHANGE INPUT PAGE (1-4).............._
CHANGE OUTPUT PAGE (1-4)............._
OVERRIDE PHASE CONTROL FUNCTION (Y)._
```

→ ENTER A 'Y' FOR NOT ENABLED →

DEFAULT DETECTOR NUMBER WILL REMAIN UNTIL 'NOT ENABLED' IS ENTERED.

(LOOP 1A - PHASE 6)

```
PAGE: 2 C1 PIN:48  NOT ENABLED
INPUT ASSIGNMENT #.................10
DEBOUNCE TIME (0-25.5 SEC).........0.5
DELAY TIME (0-25.5 SEC).............0.0
HOLD-OVER TIME (0-25.5 SEC).........0.0
ASSIGNMENT SELECTION:
NOT ENABLED (Y/N)...................Y
VEHICLE DETECTOR (1-64).............._
PEDESTRIAN DETECTOR (1-16).........._
ALTERNATE PED DETECTOR (1-16)......._
PREEMPT (1-10)......................._
INVERTED PREEMPT (1-10).............._
STOP TIME (Y/N)......................_
FLASH SENSE (Y/N)...................._
DOOR OPEN (Y/N)......................_
MANUAL CONTROL ENABLE (Y/N).........._
MANUAL CONTROL ADVANCE (Y/N)........._
SPECIAL FUNCTION ALARM (1-8)........_
TOD HOUR SYCHRONIZATION (0-23)......_
FORCE OFF RING (1-4)................_
HOLD PHASES (1-16)..................._
PLAN (65=FLSH,66=FREE)..._  OFFSET#.._
CHANGE PHASE SEQUENCE PAGE (1-12)...._
CHANGE PHASE TIMING PAGE (1-4)......._
CHANGE PHASE CONTROL PAGE (1-4)......_
CHANGE OVERLAP CONTROL PAGE (1-4)...._
CHANGE INPUT PAGE (1-4).............._
CHANGE OUTPUT PAGE (1-4)............._
OVERRIDE PHASE CONTROL FUNCTION (Y)._
```

PRESS '+' TO ADVANCE TO INPUT 18

```
PAGE: 2 C1 PIN:56  VEHICLE DETECTOR
INPUT ASSIGNMENT #.................18
DEBOUNCE TIME (0-25.5 SEC).........0.5
DELAY TIME (0-25.5 SEC).............0.0
HOLD-OVER TIME (0-25.5 SEC).........0.0
ASSIGNMENT SELECTION:
NOT ENABLED (Y/N)...................._
VEHICLE DETECTOR (1-64).............1
PEDESTRIAN DETECTOR (1-16).........._
ALTERNATE PED DETECTOR (1-16)......._
PREEMPT (1-10)......................._
INVERTED PREEMPT (1-10).............._
STOP TIME (Y/N)......................_
FLASH SENSE (Y/N)...................._
DOOR OPEN (Y/N)......................_
MANUAL CONTROL ENABLE (Y/N).........._
MANUAL CONTROL ADVANCE (Y/N)........._
SPECIAL FUNCTION ALARM (1-8)........_
TOD HOUR SYCHRONIZATION (0-23)......_
FORCE OFF RING (1-4)................_
HOLD PHASES (1-16)..................._
PLAN (65=FLSH,66=FREE)..._  OFFSET#.._
CHANGE PHASE SEQUENCE PAGE (1-12)...._
CHANGE PHASE TIMING PAGE (1-4)......._
CHANGE PHASE CONTROL PAGE (1-4)......_
CHANGE OVERLAP CONTROL PAGE (1-4)...._
CHANGE INPUT PAGE (1-4).............._
CHANGE OUTPUT PAGE (1-4)............._
OVERRIDE PHASE CONTROL FUNCTION (Y)._
```

ENTER '51' TO REASSIGN THE VEHICLE DETECTOR FOR THIS INPUT →

(LOOP 1A - PHASE 1)

```
PAGE: 2 C1 PIN:56  VEHICLE DETECTOR
INPUT ASSIGNMENT #.................18
DEBOUNCE TIME (0-25.5 SEC).........0.5
DELAY TIME (0-25.5 SEC).............0.0
HOLD-OVER TIME (0-25.5 SEC).........0.0
ASSIGNMENT SELECTION:
NOT ENABLED (Y/N)...................._
VEHICLE DETECTOR (1-64).............51
PEDESTRIAN DETECTOR (1-16).........._
ALTERNATE PED DETECTOR (1-16)......._
PREEMPT (1-10)......................._
INVERTED PREEMPT (1-10).............._
STOP TIME (Y/N)......................_
FLASH SENSE (Y/N)...................._
DOOR OPEN (Y/N)......................_
MANUAL CONTROL ENABLE (Y/N).........._
MANUAL CONTROL ADVANCE (Y/N)........._
SPECIAL FUNCTION ALARM (1-8)........_
TOD HOUR SYCHRONIZATION (0-23)......_
FORCE OFF RING (1-4)................_
HOLD PHASES (1-16)..................._
PLAN (65=FLSH,66=FREE)..._  OFFSET#.._
CHANGE PHASE SEQUENCE PAGE (1-12)...._
CHANGE PHASE TIMING PAGE (1-4)......._
CHANGE PHASE CONTROL PAGE (1-4)......_
CHANGE OVERLAP CONTROL PAGE (1-4)...._
CHANGE INPUT PAGE (1-4).............._
CHANGE OUTPUT PAGE (1-4)............._
OVERRIDE PHASE CONTROL FUNCTION (Y)._
```

PROGRAMMING COMPLETE

SPECIAL DETECTOR PROGRAMMING DETAIL - LOOP 1A (ALT.)

(program controller as shown below)

FROM MAIN MENU PRESS '7' (DETECTORS), THEN PRESS '1' FOR VEHICLE DETECTORS. PRESS THE '-' KEY TO GET TO VEHICLE DETECTOR #51.

```
VEHICLE DETECTOR #51  SETTINGS (+-.1-64)
SETTING:                          (Y/N)
ENABLE DETECTOR.....................N
ENABLE LOGGING......................N
ENABLE DIAGNOSTICS..................N
SPEED TRAP..........................N
CALL DETECTOR.......................Y
EXTENSION DETECTOR..................Y
MODE 2 STOP BAR.....................N
SWITCHING DETECTOR..................N
DUPLICATING DETECTOR................N
ENABLE FULL TIME DELAY..............N
IF FAILED, SET MIN RECALL?..........N
IF FAILED, SET MAX1 RECALL?.........N
IF FAILED, SET MAX2 RECALL?.........N
PHASE#          ¦12345678910111213141516
PHASES ASSIGNED ¦
SWITCH/DUPLICATE¦
LOOP SIZE (0-255 FT)................6
SPEED TRAP DISTANCE (0-255 FT)......0
STOP BAR TIME (0-255 SEC)...........0
STRETCH (0-25.5 SEC)................0.0
DELAY (0-255 SEC)...................0
MAX CALLS/MIN (0-255)..............255
MIN CALLS/DIAGNOSTIC PERIOD (0-255).0
MAX OCCUPANCY (0-100%).............100
EXTENSION DISABLE TIME (0-255 SEC)..0
QUEUE MAX OCCUPANCY TIME (0-255)....0
QUEUE GAP RESET TIME (0-25.5).......0.0
PREEMPTION INDEX FOR QUEUE (0-10)...0
```

→ ENTER 'Y' FOR ENABLE DETECTOR →

ENTER '1' FOR PHASES ASSIGNED →

ENSURE DELAY IS '3' →

```
VEHICLE DETECTOR #51  SETTINGS (+-.1-64)
SETTING:                          (Y/N)
ENABLE DETECTOR.....................Y
ENABLE LOGGING......................N
ENABLE DIAGNOSTICS..................N
SPEED TRAP..........................N
CALL DETECTOR.......................Y
EXTENSION DETECTOR..................Y
MODE 2 STOP BAR.....................N
SWITCHING DETECTOR..................N
DUPLICATING DETECTOR................N
ENABLE FULL TIME DELAY..............N
IF FAILED, SET MIN RECALL?..........N
IF FAILED, SET MAX1 RECALL?.........N
IF FAILED, SET MAX2 RECALL?.........N
PHASE#          ¦12345678910111213141516
PHASES ASSIGNED ¦X
SWITCH/DUPLICATE¦
LOOP SIZE (0-255 FT)................6
SPEED TRAP DISTANCE (0-255 FT)......0
STOP BAR TIME (0-255 SEC)...........0
STRETCH (0-25.5 SEC)................0.0
DELAY (0-255 SEC)...................3
MAX CALLS/MIN (0-255)..............255
MIN CALLS/DIAGNOSTIC PERIOD (0-255).0
MAX OCCUPANCY (0-100%).............100
EXTENSION DISABLE TIME (0-255 SEC)..0
QUEUE MAX OCCUPANCY TIME (0-255)....0
QUEUE GAP RESET TIME (0-25.5).......0.0
PREEMPTION INDEX FOR QUEUE (0-10)...0
```

DETECTOR PROGRAMMING COMPLETE

NOTE: DETECTOR IS PROGRAMMED PER THE INPUT FILE CONNECTION AND PROGRAMMING CHART SHOWN ON SHEET 1.

THIS ELECTRICAL DETAIL IS FOR
THE SIGNAL DESIGN: 08-0649T3
DESIGNED: JANUARY 2022
SEALED: 4/20/2022
REVISED: N/A

Temporary Design 3 - (TMP Phase II)
Electrical Detail - Sheet 3 of 4

DOCUMENT NOT CONSIDERED FINAL UNLESS ALL SIGNATURES COMPLETED

ELECTRICAL AND PROGRAMMING DETAILS FOR:

Prepared for the Offices of:
NC Department of Transportation Mobility and Safety Division Traffic Engineering Branch Traffic Signals Management Section
750 N.Greenfield Pkwy,Garner,NC 27529

NC 42 (Broadway Road)
at
SR 1529 (Cox Mill Road)
and Bill's Body Shop

Division 8 Lee County Sanford

PLAN DATE: April 2022 REVIEWED BY: Todd Joyce
PREPARED BY: Keith M. Mims REVIEWED BY: -

REVISIONS	INIT.	DATE

SEAL
NORTH CAROLINA PROFESSIONAL SEAL 036880 ENGINEER KEITH M. MIMS

DocuSigned by: Keith M. Mims 04/21/2022
SIGNATURE DATE

SIG. INVENTORY NO. 08-0649T3

21-APR-2022 14:11
K:\Projects\08-0649_SHL_016_13_xxxxxx.dgn
kmims

PROJECT REFERENCE NO.	SHEET NO.
R-3830	Sig. 20.4

ALTERNATE PHASING ACTIVATION DETAIL

TO RUN ALT. PHASING DURING COORDINATION - SELECT ALL PAGE CHANGES (AS SHOWN BELOW) WITHIN COORDINATION PLAN PROGRAMMING.

TO RUN ALT. PHASING DURING FREE RUN - PROGRAM PAGE CHANGES (SHOWN BELOW) IN SEPARATE TIME OF DAY EVENTS. IF PAGE 1 IS USED, NO EVENT PROGRAMMING IS NECESSARY FOR THAT PARTICULAR PAGE.

PHASING	INPUTS PAGE	OVERLAPS PAGE
ACTIVE PAGES REQUIRED TO RUN DEFAULT PHASING	1	1
ACTIVE PAGES REQUIRED TO RUN ALTERNATE PHASING	2	2

NOTE: PAGES NOT SHOWN (i.e. sequence, phase control, etc.) SHOULD REMAIN AS '1', OR AS DEFINED BY TIMING ENGINEER.

IMPORTANT: IF ALT. PHASING IS USED DURING FREE RUN AND COORDINATION, DO NOT OPERATE TIME OF DAY PAGE CHANGE EVENTS CONCURRENTLY WITH COORDINATION PLAN EVENTS IN THE EVENT SCHEDULER. (EX. FREE RUN PAGE CHANGE EVENT SHOULD END BEFORE COORDINATION PLAN EVENT STARTS AND VICE-VERSA).

ALTERNATE PHASING PAGE CHANGE SUMMARY

THE FOLLOWING IS A SUMMARY OF WHAT TAKES PLACE WHEN THESE OVERLAP/INPUT PAGE CHANGES ACTIVATE TO CALL THE "ALTERNATE PHASING":

OVERLAPS PAGE 2: Modifies overlap parent phases for head 11 to run protected turns only.

INPUTS PAGE 2: Disables phase 6 call on loop 1A and reduces delay time for phase 1 call on loop 1A to 3 seconds.

THIS ELECTRICAL DETAIL IS FOR
THE SIGNAL DESIGN: 08-0649T3
DESIGNED: JANUARY 2022
SEALED: 4/20/2022
REVISED: N/A

Temporary Design 3 - (TMP Phase II)
Electrical Detail - Sheet 4 of 4

DOCUMENT NOT CONSIDERED FINAL UNLESS ALL SIGNATURES COMPLETED

ELECTRICAL AND PROGRAMMING DETAILS FOR:

Prepared for the Offices of:

NC Department of Transportation Mobility and Safety Division Traffic Engineering Branch Signals Management Section

750 N.Greenfield Pkwy,Garner,NC 27529

NC 42 (Broadway Road)
at
SR 1529 (Cox Mill Road)
and Bill's Body Shop

Division 8 Lee County Sanford

PLAN DATE:	April 2022	REVIEWED BY:	Todd Joyce
PREPARED BY:	Keith M. Mims	REVIEWED BY:	-

REVISIONS	INIT.	DATE

SEAL

NORTH CAROLINA PROFESSIONAL SEAL 036880 ENGINEER KEITH M. MIMS

DocuSigned by: Keith M. Mims 04/21/2022
SIGNATURE DATE

SIG. INVENTORY NO. 08-0649T3

21-APR-2022 14:12
\\NCDOT\08-0649_SHL_010_13_xxxxxx.dgn
kmims

PROJECT REFERENCE NO.	SHEET NO.
R-3830	SIG-21.0

DEFAULT PHASING DIAGRAM

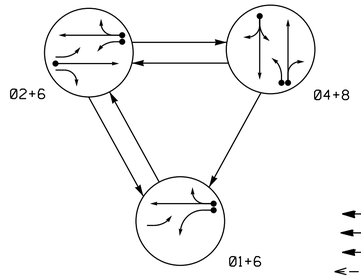

ALTERNATE PHASING DIAGRAM

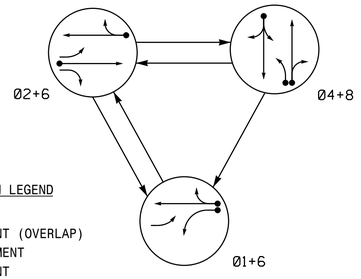

PHASING DIAGRAM DETECTION LEGEND

- DETECTED MOVEMENT
- UNDETECTED MOVEMENT (OVERLAP)
- UNSIGNALIZED MOVEMENT
- PEDESTRIAN MOVEMENT

DEFAULT PHASING TABLE OF OPERATION

SIGNAL FACE	PHASE 01+6	PHASE 02+6	PHASE 04+8	PHASE FLASH
11	←	~~F Y~~	~~R~~	~~Y~~
21	~~F Y~~	~~F Y~~	~~R~~	~~Y~~
22, 23	R	G	R	Y
41, 42	R	R	G	R
61, 62	G	G	R	Y
81	~~R~~	~~R~~	~~F Y~~	~~R~~
82, 83, 84	R	R	G	R

ALTERNATE PHASING TABLE OF OPERATION

SIGNAL FACE	PHASE 01+6	PHASE 02+6	PHASE 04+8	PHASE FLASH
11	←	~~R~~	~~R~~	~~Y~~
21	~~F Y~~	~~F Y~~	~~R~~	~~Y~~
22, 23	R	G	R	Y
41, 42	R	R	G	R
61, 62	G	G	R	Y
81	~~R~~	~~R~~	~~F Y~~	~~R~~
82, 83, 84	R	R	G	R

OASIS 2070 LOOP & DETECTOR INSTALLATION CHART

	INDUCTIVE LOOPS				DETECTOR PROGRAMMING							
ZONE	SIZE (FT)	DISTANCE FROM STOPBAR (FT)	TURNS	NEW LOOP	PHASE	CALLING	EXTENSION	FULL TIME DELAY	STRETCH TIME	DELAY TIME	SYSTEM LOOP	NEW CARD
1A	6X40	0	✳	✳	1	Y	Y	-	-	★15	-	✳
					#6	Y	Y	Y	-	3	-	✳
2A	6X6	300	✳	✳	2	Y	Y	-	-	-	-	✳
4A	6X15	0	✳	✳	4	Y	Y	-	-	10	-	✳
6A	6X6	300	✳	✳	6	Y	Y	-	-	-	-	✳
8A	6X40	0	✳	✳	8	Y	Y	-	-	3	-	✳
8B	6X40	0	✳	✳	8	Y	Y	-	-	10	-	✳

✳ Video Detection Zone
★ Disable Delay during Alternate Phasing Operation.
Disable Phase(s) call during Alternate Phasing Operation.

3 Phase
Fully Acutated
(Isolated)

NOTES

1. Refer to "Roadway Standard Drawings NCDOT" dated January 2018 and "Standard Specifications for Roads and Structures" dated January 2018.
2. Do not program signal for late night flashing operation unless otherwise directed by the Engineer.
3. Phase 1 may be lagged.
4. Reposition existing signal heads numbered 11, 61, and 62.
5. Set all detector units to presence mode.
6. The Division Traffic Engineer will determine the hours of use for each phasing plan.
7. This intersection uses video detection. Install detectors according to the manufacturer's instructions to achieve the desired detection.

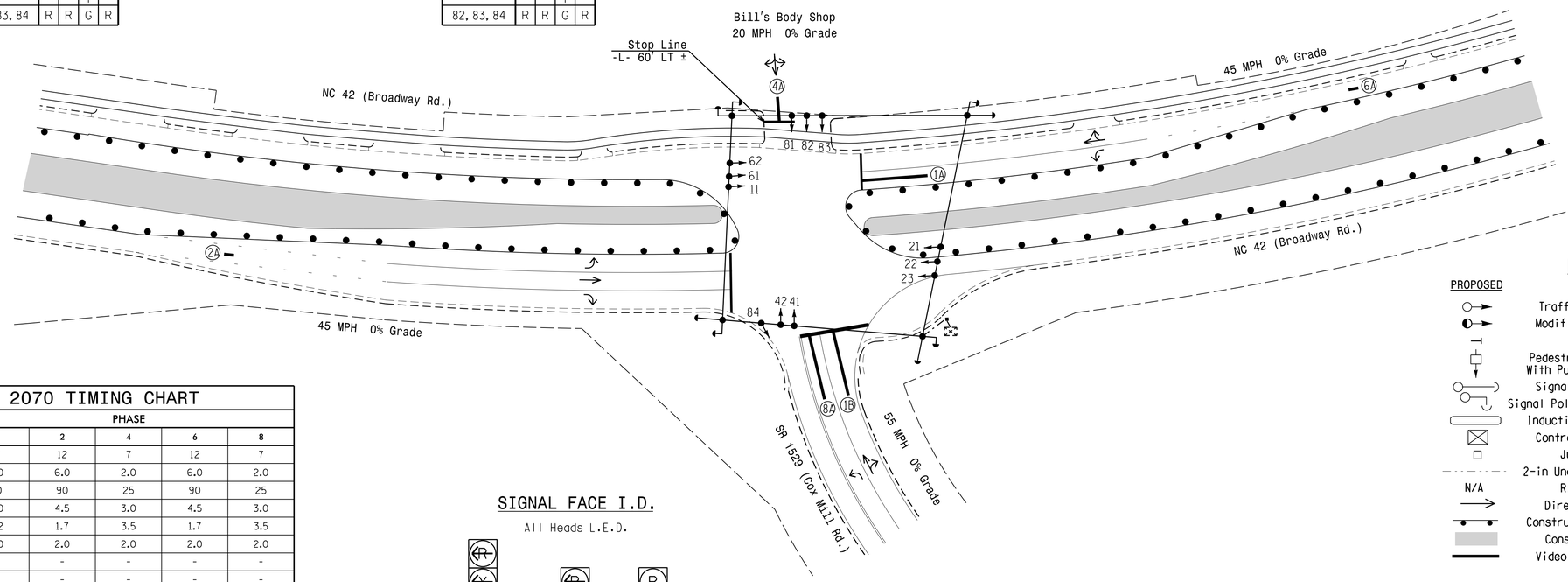

LEGEND

PROPOSED		EXISTING
○→	Traffic Signal Head	●→
◐→	Modified Signal Head	N/A
⊣	Sign	⊣
□↓	Pedestrian Signal Head With Push Button & Sign	■↓
○	Signal Pole with Guy	●◗
○	Signal Pole with Sidewalk Guy	●◗
▭	Inductive Loop Detector	▭
⊠	Controller & Cabinet	⊠
□	Junction Box	■
	2-in Underground Conduit	
N/A	Right of Way	
→	Directional Arrow	→
●●	Construction Zone Drums	●●
▒	Construction Zone	▒
▬	Video Detection Zone	▬

SIGNAL FACE I.D.

All Heads L.E.D.

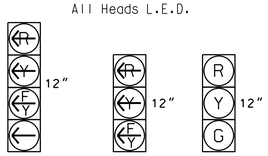

11
21
81
22, 23
41, 42
61, 62
82, 83, 84

OASIS 2070 TIMING CHART

FEATURE	PHASE 1	PHASE 2	PHASE 4	PHASE 6	PHASE 8
Min Green 1 *	7	12	7	12	7
Extension 1 *	2.0	6.0	2.0	6.0	2.0
Max Green 1 *	20	90	25	90	25
Yellow Clearance	3.0	4.5	3.0	4.5	3.0
Red Clearance	3.2	1.7	3.5	1.7	3.5
Red Revert	2.0	2.0	2.0	2.0	2.0
Walk 1 *	-	-	-	-	-
Don't Walk 1	-	-	-	-	-
Seconds Per Actuation *	-	2.5	-	2.5	-
Max Variable Initial *	-	34	-	34	-
Time Before Reduction *	-	15	-	15	-
Time To Reduce *	-	30	-	30	-
Minimum Gap	-	3.2	-	3.2	-
Recall Mode	-	MIN RECALL	-	MIN RECALL	-
Vehicle Call Memory	-	YELLOW	-	YELLOW	-
Dual Entry	-	-	ON	-	ON
Simultaneous Gap	ON	ON	ON	ON	ON

* These values may be field adjusted. Do not adjust Min Green and Extension times for phases 2 and 6 lower than what is shown. Min Green for all other phases should not be lower than 4 seconds.

Signal Upgrade -
Temporary Design 4 (TMP Phase III)

DOCUMENT NOT CONSIDERED FINAL UNLESS ALL SIGNATURES COMPLETED

Prepared In the Offices of:
Transportation Mobility and Safety Division
Signal Design Section
750 N.Greenfield Pkwy.Garner,NC 27529

NC 42 (Broadway Road)
at
SR 1529 (Cox Mill Road)
and Bill's Body Shop

Division 8 Lee County Sanford

PLAN DATE: January 2022 REVIEWED BY:
PREPARED BY: J.A. Lohr REVIEWED BY:

SCALE 0 40 1"=40'

REVISIONS	INIT.	DATE

SEAL
NORTH CAROLINA PROFESSIONAL SEAL 026486 ENGINEER ROBERT J. ZIEMBA

DocuSigned by: Robert J. Ziemba 1B984B6274A684
04/20/2022
DATE

SIG. INVENTORY NO. 08-0649T4

$$$$$$$$$DATE$$$$$$
20-APR-2022 07:39
N:\Projects\0649T4_Sig_Rev_2022mod.dgn
jlohr

PROJECT REFERENCE NO.	SHEET NO.
R-3830	Sig. 21.1

EDI MODEL 2018ECL-NC CONFLICT MONITOR PROGRAMMING DETAIL

(remove jumpers and set switches as shown)

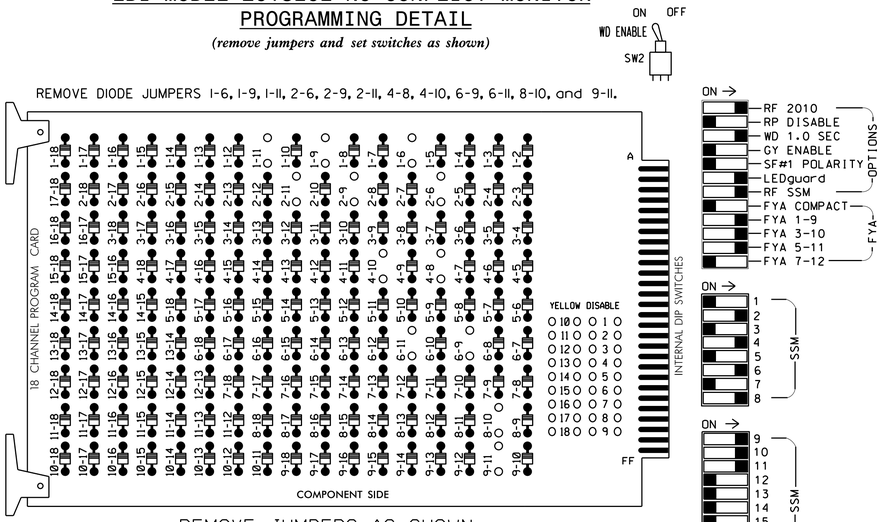

REMOVE JUMPERS AS SHOWN

NOTES:

1. Card is provided with all diode jumpers in place. Removal of any jumper allows its channels to run concurrently.
2. Ensure jumpers SEL2-SEL5 and SEL9 are present on the monitor board.
3. Ensure that Red Enable is active at all times during normal operation.
4. Connect serial cable from conflict monitor to comm. port 1 of 2070 controller. Ensure conflict monitor communicates with 2070.

■ = DENOTES POSITION OF SWITCH

NOTES

1. To prevent "flash-conflict" problems, insert red flash program blocks for all unused vehicle load switches in the output file. The installer shall verify that signal heads flash in accordance with the Signal Plans.
2. Program phases 4 and 8 for Dual Entry.
3. Enable Simultaneous Gap-Out for all Phases.
4. Program phases 2 and 6 for Variable Initial and Gap Reduction.
5. Program phases 2 and 6 for Startup In Green.
6. Program phases 2 and 6 for Yellow Flash, and overlaps 1 and 2 as Wag Overlaps.
7. If this signal will be managed by an ATMS software, enable controller and detector logging for all detectors used at this location.

EQUIPMENT INFORMATION

CONTROLLER.....2070
CABINET.....332 W/ AUX
SOFTWARE.....ECONOLITE OASIS
CABINET MOUNT.....BASE
OUTPUT FILE POSITIONS...18 WITH AUX. OUTPUT FILE
LOAD SWITCHES USED.....S1,S2,S5,S8,S11,AUXS1,AUXS2,AUXS4
PHASES USED.....1,2,4,6,8
OVERLAP "A".....1+2
OVERLAP "B".....4
OVERLAP "C".....6
OVERLAP "D".....NOT USED

SIGNAL HEAD HOOK-UP CHART

LOAD SWITCH NO.	S1	S2	S3	S4	S5	S6	S7	S8	S9	S10	S11	S12	AUX S1	AUX S2	AUX S3	AUX S4	AUX S5	AUX S6
CMU CHANNEL NO.	1	2	13	3	4	14	5	6	15	7	8	16	9	10	17	11	12	18
PHASE	1	2	2 PED	3	4	4 PED	5	6	6 PED	7	8	8 PED	OLA	OLB	SPARE	OLC	OLD	SPARE
SIGNAL HEAD NO.	11★	22,23	NU	NU	41,42	NU	NU	61,62	NU	NU	82,83 84	NU	11★	81★	NU	21★	NU	NU
RED		128			101			134			107							
YELLOW	✳	129			102			135			108							
GREEN		130			103			136			109							
RED ARROW													A121	A124		A114		
YELLOW ARROW													A122	A125		A115		
FLASHING YELLOW ARROW													A123	A126		A116		
GREEN ARROW	127																	

NU = Not Used

✳ Denotes install load resistor. See load resistor installation detail this sheet.

★ See pictorial of head wiring in detail this sheet.

FYA SIGNAL WIRING DETAIL

(wire signal heads as shown)

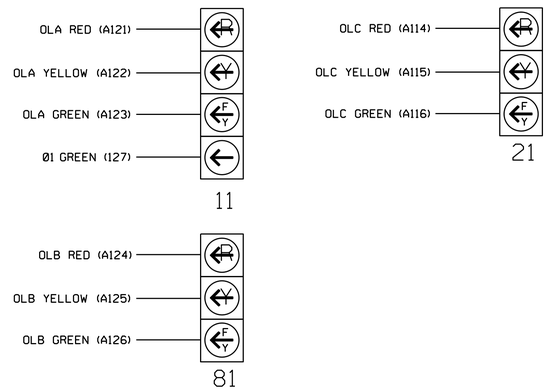

NOTE

The sequence display for signal head 11 requires special logic programming. See sheet 2 for programming instructions.

INPUT FILE POSITION LAYOUT

(front view)

	U/L	1	2	3	4	5	6	7	8	9	10	11	12	13	14
FILE "I"	U	Ø 1 1A	SLOT EMPTY	SLOT EMPTY	SLOT EMPTY	SLOT EMPTY	SLOT EMPTY	SLOT EMPTY	SLOT EMPTY	SLOT EMPTY	SLOT EMPTY	SLOT EMPTY	SLOT EMPTY	SLOT EMPTY	FS DC ISOLATOR
	L	NOT USED													ST DC ISOLATOR
FILE "J"	U	SLOT EMPTY	SLOT EMPTY	SLOT EMPTY	WIRED INPUT ⊗	SLOT EMPTY	SLOT EMPTY	SLOT EMPTY	SLOT EMPTY	SLOT EMPTY	SLOT EMPTY	SLOT EMPTY	SLOT EMPTY	SLOT EMPTY	SLOT EMPTY
	L														

EX.: 1A, 2A, ETC. = LOOP NO.'S

FS = FLASH SENSE
ST = STOP TIME

⊗ Wired Input - Do not populate slot with detector card

INPUT FILE CONNECTION & PROGRAMMING CHART

LOOP NO.	LOOP TERMINAL	INPUT FILE POS.	PIN NO.	INPUT ASSIGNMENT NO.	DETECTOR NO.	NEMA PHASE	CALL	EXTEND	FULL TIME DELAY	STRETCH TIME	DELAY TIME
1A[1]	TB2-1,2	I1U	56	18	1	1	Y	Y			15
	-	J4U	48	10★	26	6	Y	Y	Y		3
	-	I1U	56	18★	51	1	Y	Y			

[1] Add jumper from I1-W to J4-W, on rear of input file.

★ See Input Page Assignment programming details on sheet 3.

INPUT FILE POSITION LEGEND: J2L
FILE J
SLOT 2
LOWER

LOAD RESISTOR INSTALLATION DETAIL

(install resistor as shown below)

ACCEPTABLE VALUES	
VALUE (ohms)	WATTAGE
1.5K - 1.9K	25W (min)
2.0K - 3.0K	10W (min)

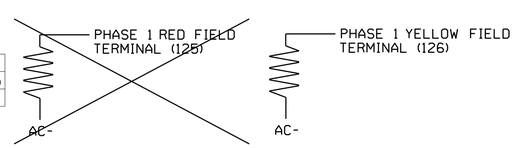

REMOVE, IF PRESENT

DETECTOR NOTES

1. For all loops install a video detection system for vehicle detection. Perform installation according to manufacturer's directions and NCDOT engineer-approved mounting locations to accomplish the detection schemes shown on the Signal Design Plans.
2. For loop 1A, detector card placement and slot reserved for wired input are typical for a NCDOT installation. Input associated with this slot are compatible with time of day instructions located on sheet 3 of this electrical detail.

THIS ELECTRICAL DETAIL IS FOR
THE SIGNAL DESIGN: 08-0649T4
DESIGNED: JANUARY 2022
SEALED: 4/20/2022
REVISED: N/A

Temporary Design 4 - (TMP Phase III)
Electrical Detail - Sheet 1 of 4

DOCUMENT NOT CONSIDERED FINAL UNLESS ALL SIGNATURES COMPLETED

ELECTRICAL AND PROGRAMMING DETAILS FOR:

Prepared for the Offices of:
Traffic Engineering Branch, Transportation Mobility and Safety Division, North Carolina Department of Transportation, Traffic Engineering & Safety Systems Branch, Traffic Signals Management Section
750 N.Greenfield Pkwy.Garner,NC 27529

NC 42 (Broadway Road)
at
SR 1529 (Cox Mill Road)
and Bill's Body Shop
Division 8 Lee County Sanford

PLAN DATE:	April 2022	REVIEWED BY:	Todd Joyce
PREPARED BY:	Keith M. Mims	REVIEWED BY:	-

REVISIONS	INIT.	DATE

SEAL
NORTH CAROLINA PROFESSIONAL SEAL 036880 ENGINEER KEITH M. MIMS

DocuSigned by: Keith M. Mims 04/21/2022
SIGNATURE DATE

SIG. INVENTORY NO. 08-0649T4

21-APR-2022 13:38
K:\08649_sig\08_14_xxxxxx.dgn
kmims

PROJECT REFERENCE NO.	SHEET NO.
R-3830	Sig.21.2

LOGICAL I/O PROCESSOR PROGRAMMING DETAIL TO PRODUCE SPECIAL FYA-PPLT SIGNAL SEQUENCE

(program controller as shown below)

1. FROM MAIN MENU PRESS '2' (PHASE CONTROL), THEN '1' (PHASE CONTROL FUNCTIONS). SCROLL TO THE BOTTOM OF THE MENU AND ENABLE ACT LOGIC COMMANDS 1, 2, AND 3.

2. FROM MAIN MENU PRESS '6' (OUTPUTS), THEN '3' (LOGICAL I/O PROCESSOR).

```
  LOGICAL I/O COMMAND #1  (+/-COMMAND#)
IF  ACTIVE PHASE       #1  IS ON
AND RED CLEAR ON PHASE #1  IS ON

            SCROLL DOWN

THEN:
SET OUTPUT  ASSIGNMENT #50 ON
SET OUTPUT  ASSIGNMENT #51 OFF
```

NOTE: LOGIC FOR PHASE 1 RED CLEAR WHEN TRANSITIONING FROM PHASE 1 TO PHASE 2 (HEAD 11).

PRESS '+'

```
  LOGICAL I/O COMMAND #2  (+/-COMMAND#)
IF  ACTIVE PHASE       #1  IS ON

            SCROLL DOWN

THEN:
SET OUTPUT  ASSIGNMENT #52 OFF
```

NOTE: LOGIC FOR SWITCHING FLASHING YELLOW ARROW OFF DURING PHASE 1 (HEAD 11).

PRESS '+'

```
  LOGICAL I/O COMMAND #3  (+/-COMMAND#)
IF  YELLOW ON PHASE    #1  IS ON

            SCROLL DOWN

THEN:
SET OUTPUT  ASSIGNMENT #51 ON
```

NOTE: LOGIC FOR YELLOW ARROW CLEARANCE FROM PHASE 1 (HEAD 11).

LOGIC I/O PROCESSOR PROGRAMMING COMPLETE

OUTPUT REFERENCE SCHEDULE

OUTPUT 50 = Overlap A Red
OUTPUT 51 = Overlap A Yellow
OUTPUT 52 = Overlap A Green

FLASHER CIRCUIT MODIFICATION DETAIL

IN ORDER TO ENSURE THAT SIGNALS FLASH CONCURRENTLY ON THE SAME APPROACH, MAKE THE FOLLOWING FLASHER CIRCUIT CHANGES:

1. ON REAR OF PDA - REMOVE WIRE FROM TERM. T2-4 AND TERMINATE ON T2-2.
2. ON REAR OF PDA - REMOVE WIRE FROM TERM. T2-5 AND TERMINATE ON T2-3.
3. REMOVE FLASHER UNIT 2.

THE CHANGES LISTED ABOVE TIES ALL PHASES AND OVERLAPS TO FLASHER UNIT 1.

OVERLAP PROGRAMMING DETAIL FOR DEFAULT PHASING

(program controller as shown below)

FROM MAIN MENU PRESS '8' (OVERLAPS), THEN '1' (VEHICLE OVERLAP SETTINGS).

```
 PAGE 1: VEHICLE OVERLAP 'A' SETTINGS
 PHASE:          |12345678910111213141516
VEH OVL PARENTS: |XX
VEH OVL NOT VEH: |
VEH OVL NOT PED: |
VEH OVL GRN EXT: |
STARTUP COLOR:  _ RED  _ YELLOW  _ GREEN
FLASH COLORS:   _ RED  _ YELLOW  X GREEN
SELECT VEHICLE OVERLAP OPTIONS:   (Y/N)
FLASH YELLOW IN CONTROLLER FLASH?...Y
GREEN EXTENSION (0-255 SEC).........0
YELLOW CLEAR (0=PARENT,3-25.5 SEC)..0.0
RED CLEAR (0=PARENT,0.1-25.5 SEC)...0.0
OUTPUT AS PHASE # (0=NONE, 1-16)....0
```

NOTICE GREEN FLASH

PRESS '+'

```
 PAGE 1: VEHICLE OVERLAP 'B' SETTINGS
 PHASE:          |12345678910111213141516
VEH OVL PARENTS: |   X
VEH OVL NOT VEH: |
VEH OVL NOT PED: |
VEH OVL GRN EXT: |
STARTUP COLOR:  _ RED  _ YELLOW  _ GREEN
FLASH COLORS:   _ RED  _ YELLOW  X GREEN
SELECT VEHICLE OVERLAP OPTIONS:   (Y/N)
FLASH YELLOW IN CONTROLLER FLASH?...N
GREEN EXTENSION (0-255 SEC).........0
YELLOW CLEAR (0=PARENT,3-25.5 SEC)..0.0
RED CLEAR (0=PARENT,0.1-25.5 SEC)...0.0
OUTPUT AS PHASE # (0=NONE, 1-16)....0
```

NOTICE GREEN FLASH

PRESS '+'

```
 PAGE 1: VEHICLE OVERLAP 'C' SETTINGS
 PHASE:          |12345678910111213141516
VEH OVL PARENTS: |     X
VEH OVL NOT VEH: |
VEH OVL NOT PED: |
VEH OVL GRN EXT: |
STARTUP COLOR:  _ RED  _ YELLOW  _ GREEN
FLASH COLORS:   _ RED  _ YELLOW  X GREEN
SELECT VEHICLE OVERLAP OPTIONS:   (Y/N)
FLASH YELLOW IN CONTROLLER FLASH?...Y
GREEN EXTENSION (0-255 SEC).........0
YELLOW CLEAR (0=PARENT,3-25.5 SEC)..0.0
RED CLEAR (0=PARENT,0.1-25.5 SEC)...0.0
OUTPUT AS PHASE # (0=NONE, 1-16)....0
```

NOTICE GREEN FLASH

OVERLAP PROGRAMMING COMPLETE

OVERLAP PROGRAMMING DETAIL FOR ALTERNATE PHASING

(program controller as shown below)

FROM MAIN MENU PRESS '8' (OVERLAPS), THEN '1' (VEHICLE OVERLAP SETTINGS). PRESS 'NEXT' TO ADVANCE TO PAGE 2.

NOTICE PAGE 2 →

```
 PAGE 2: VEHICLE OVERLAP 'A' SETTINGS
 PHASE:          |12345678910111213141516
VEH OVL PARENTS: |X
VEH OVL NOT VEH: |
VEH OVL NOT PED: |
VEH OVL GRN EXT: |
STARTUP COLOR:  _ RED  _ YELLOW  _ GREEN
FLASH COLORS:   _ RED  _ YELLOW  _ GREEN
SELECT VEHICLE OVERLAP OPTIONS:   (Y/N)
FLASH YELLOW IN CONTROLLER FLASH?...Y
GREEN EXTENSION (0-255 SEC).........0
YELLOW CLEAR (0=PARENT,3-25.5 SEC)..0.0
RED CLEAR (0=PARENT,0.1-25.5 SEC)...0.0
OUTPUT AS PHASE # (0=NONE, 1-16)....0
```

PRESS '+'

NOTICE PAGE 2 →

```
 PAGE 2: VEHICLE OVERLAP 'B' SETTINGS
 PHASE:          |12345678910111213141516
VEH OVL PARENTS: |   X
VEH OVL NOT VEH: |
VEH OVL NOT PED: |
VEH OVL GRN EXT: |
STARTUP COLOR:  _ RED  _ YELLOW  _ GREEN
FLASH COLORS:   _ RED  _ YELLOW  X GREEN
SELECT VEHICLE OVERLAP OPTIONS:   (Y/N)
FLASH YELLOW IN CONTROLLER FLASH?...N
GREEN EXTENSION (0-255 SEC).........0
YELLOW CLEAR (0=PARENT,3-25.5 SEC)..0.0
RED CLEAR (0=PARENT,0.1-25.5 SEC)...0.0
OUTPUT AS PHASE # (0=NONE, 1-16)....0
```

NOTICE GREEN FLASH

PRESS '+'

NOTICE PAGE 2 →

```
 PAGE 2: VEHICLE OVERLAP 'C' SETTINGS
 PHASE:          |12345678910111213141516
VEH OVL PARENTS: |     X
VEH OVL NOT VEH: |
VEH OVL NOT PED: |
VEH OVL GRN EXT: |
STARTUP COLOR:  _ RED  _ YELLOW  _ GREEN
FLASH COLORS:   _ RED  _ YELLOW  X GREEN
SELECT VEHICLE OVERLAP OPTIONS:   (Y/N)
FLASH YELLOW IN CONTROLLER FLASH?...Y
GREEN EXTENSION (0-255 SEC).........0
YELLOW CLEAR (0=PARENT,3-25.5 SEC)..0.0
RED CLEAR (0=PARENT,0.1-25.5 SEC)...0.0
OUTPUT AS PHASE # (0=NONE, 1-16)....0
```

NOTICE GREEN FLASH

OVERLAP PROGRAMMING COMPLETE

THIS ELECTRICAL DETAIL IS FOR
THE SIGNAL DESIGN: 08-0649T4
DESIGNED: JANUARY 2022
SEALED: 4/20/2022
REVISED: N/A

Temporary Design 4 - (TMP Phase III)
Electrical Detail - Sheet 2 of 4

DOCUMENT NOT CONSIDERED FINAL UNLESS ALL SIGNATURES COMPLETED

ELECTRICAL AND PROGRAMMING DETAILS FOR:

NC 42 (Broadway Road)
at
SR 1529 (Cox Mill Road)
and Bill's Body Shop

Division 8 | Lee County | Sanford

Prepared for the Offices of:
Traffic Engineering Branch, Mobility and Safety Division, NCDOT, Traffic Engineering & Signals Management Section
750 N.Greenfield Pkwy.Garner,NC 27529

PLAN DATE: April 2022 | REVIEWED BY: Todd Joyce
PREPARED BY: Keith M. Mims | REVIEWED BY: -

REVISIONS	INIT.	DATE

SEAL
NORTH CAROLINA PROFESSIONAL SEAL 036880 ENGINEER KEITH M. MIMS

DocuSigned by: Keith M. Mims 04/21/2022
SIGNATURE DATE

SIG. INVENTORY NO. 08-0649T4

21-APR-2022 13:43
k:\08649_SIG_08_T4_xxxxxx.dgn
kmims

PROJECT REFERENCE NO.	SHEET NO.
R-3830	Sig. 21.3

INPUT PAGE 2 ASSIGNMENT PROGRAMMING DETAIL FOR ALTERNATE PHASING - LOOP 1A

(program controller as shown below)

NOTES: 1. THIS PROGRAMMING APPLIES FOR INPUT PAGE 2 ONLY. INPUT PAGE 1 WILL USE STANDARD DEFAULT SETTINGS. THIS PROGRAMMING IS NECESSARY FOR PROPER DETECTOR OPERATION DURING ALTERNATE PHASING OPERATION.

2. THE FIRST TASK THIS PROGRAMMING ACCOMPLISHES IS THE DISABLING OF INPUT #10 (DETECTOR 26) SO THAT A VEHICLE CALL WILL NOT BE PLACED TO PHASE 6 DURING ALTERNATE PHASING OPERATION. THE SECOND TASK THIS PROGRAMMING ACCOMPLISHES IS THAT IT REASSIGNS DETECTOR 51 TO INPUT #18 SO THAT THE DELAY ON LOOP 1A CAN BE REDUCED FROM 15 SECONDS TO 0 SECONDS.

FROM MAIN MENU PRESS '5' (INPUTS), THEN PRESS 'NEXT' TO GET TO INPUT PAGE '2'. PRESS THE '+' KEY UNTIL INPUT 10 IS REACHED.

```
PAGE: 2 C1 PIN:48  VEHICLE DETECTOR
INPUT ASSIGNMENT #.................10
DEBOUNCE TIME (0-25.5 SEC).........0.5
DELAY TIME (0-25.5 SEC).............0.0
HOLD-OVER TIME (0-25.5 SEC).........0.0
ASSIGNMENT SELECTION:
NOT ENABLED (Y/N)...................Y
VEHICLE DETECTOR (1-64).............26
PEDESTRIAN DETECTOR (1-16).........._
ALTERNATE PED DETECTOR (1-16)......._
PREEMPT (1-10)......................._
INVERTED PREEMPT (1-10).............._
STOP TIME (Y/N)......................_
FLASH SENSE (Y/N)...................._
DOOR OPEN (Y/N)......................_
MANUAL CONTROL ENABLE (Y/N).........._
MANUAL CONTROL ADVANCE (Y/N)........._
SPECIAL FUNCTION ALARM (1-8)........._
TOD HOUR SYCHRONIZATION (0-23)......._
FORCE OFF RING (1-4)................._
HOLD PHASES (1-16)..................._
PLAN (65=FLSH,66=FREE)..._  OFFSET#.._
CHANGE PHASE SEQUENCE PAGE (1-12)...._
CHANGE PHASE TIMING PAGE (1-4)......._
CHANGE PHASE CONTROL PAGE (1-4)....._
CHANGE OVERLAP CONTROL PAGE (1-4)...._
CHANGE INPUT PAGE (1-4).............._
CHANGE OUTPUT PAGE (1-4)............._
OVERRIDE PHASE CONTROL FUNCTION (Y)._
```

→ ENTER A 'Y' FOR NOT ENABLED →

DEFAULT DETECTOR NUMBER WILL REMAIN UNTIL 'NOT ENABLED' IS ENTERED.

(LOOP 1A - PHASE 6)

```
PAGE: 2 C1 PIN:48  NOT ENABLED
INPUT ASSIGNMENT #.................10
DEBOUNCE TIME (0-25.5 SEC).........0.5
DELAY TIME (0-25.5 SEC).............0.0
HOLD-OVER TIME (0-25.5 SEC).........0.0
ASSIGNMENT SELECTION:
NOT ENABLED (Y/N)...................Y
VEHICLE DETECTOR (1-64).............._
PEDESTRIAN DETECTOR (1-16).........._
ALTERNATE PED DETECTOR (1-16)......._
PREEMPT (1-10)......................._
INVERTED PREEMPT (1-10).............._
STOP TIME (Y/N)......................_
FLASH SENSE (Y/N)...................._
DOOR OPEN (Y/N)......................_
MANUAL CONTROL ENABLE (Y/N).........._
MANUAL CONTROL ADVANCE (Y/N)........._
SPECIAL FUNCTION ALARM (1-8)........._
TOD HOUR SYCHRONIZATION (0-23)......._
FORCE OFF RING (1-4)................._
HOLD PHASES (1-16)..................._
PLAN (65=FLSH,66=FREE)..._  OFFSET#.._
CHANGE PHASE SEQUENCE PAGE (1-12)...._
CHANGE PHASE TIMING PAGE (1-4)......._
CHANGE PHASE CONTROL PAGE (1-4)....._
CHANGE OVERLAP CONTROL PAGE (1-4)...._
CHANGE INPUT PAGE (1-4).............._
CHANGE OUTPUT PAGE (1-4)............._
OVERRIDE PHASE CONTROL FUNCTION (Y)._
```

PRESS '+' TO ADVANCE TO INPUT 18

```
PAGE: 2 C1 PIN:56  VEHICLE DETECTOR
INPUT ASSIGNMENT #.................18
DEBOUNCE TIME (0-25.5 SEC).........0.5
DELAY TIME (0-25.5 SEC).............0.0
HOLD-OVER TIME (0-25.5 SEC).........0.0
ASSIGNMENT SELECTION:
NOT ENABLED (Y/N)...................._
VEHICLE DETECTOR (1-64).............1
PEDESTRIAN DETECTOR (1-16).........._
ALTERNATE PED DETECTOR (1-16)......._
PREEMPT (1-10)......................._
INVERTED PREEMPT (1-10).............._
STOP TIME (Y/N)......................_
FLASH SENSE (Y/N)...................._
DOOR OPEN (Y/N)......................_
MANUAL CONTROL ENABLE (Y/N).........._
MANUAL CONTROL ADVANCE (Y/N)........._
SPECIAL FUNCTION ALARM (1-8)........._
TOD HOUR SYCHRONIZATION (0-23)......._
FORCE OFF RING (1-4)................._
HOLD PHASES (1-16)..................._
PLAN (65=FLSH,66=FREE)..._  OFFSET#.._
CHANGE PHASE SEQUENCE PAGE (1-12)...._
CHANGE PHASE TIMING PAGE (1-4)......._
CHANGE PHASE CONTROL PAGE (1-4)....._
CHANGE OVERLAP CONTROL PAGE (1-4)...._
CHANGE INPUT PAGE (1-4).............._
CHANGE OUTPUT PAGE (1-4)............._
OVERRIDE PHASE CONTROL FUNCTION (Y)._
```

ENTER '51' TO REASSIGN THE VEHICLE DETECTOR FOR THIS INPUT →

(LOOP 1A - PHASE 1)

```
PAGE: 2 C1 PIN:56  VEHICLE DETECTOR
INPUT ASSIGNMENT #.................18
DEBOUNCE TIME (0-25.5 SEC).........0.5
DELAY TIME (0-25.5 SEC).............0.0
HOLD-OVER TIME (0-25.5 SEC).........0.0
ASSIGNMENT SELECTION:
NOT ENABLED (Y/N)...................._
VEHICLE DETECTOR (1-64).............51
PEDESTRIAN DETECTOR (1-16).........._
ALTERNATE PED DETECTOR (1-16)......._
PREEMPT (1-10)......................._
INVERTED PREEMPT (1-10).............._
STOP TIME (Y/N)......................_
FLASH SENSE (Y/N)...................._
DOOR OPEN (Y/N)......................_
MANUAL CONTROL ENABLE (Y/N).........._
MANUAL CONTROL ADVANCE (Y/N)........._
SPECIAL FUNCTION ALARM (1-8)........._
TOD HOUR SYCHRONIZATION (0-23)......._
FORCE OFF RING (1-4)................._
HOLD PHASES (1-16)..................._
PLAN (65=FLSH,66=FREE)..._  OFFSET#.._
CHANGE PHASE SEQUENCE PAGE (1-12)...._
CHANGE PHASE TIMING PAGE (1-4)......._
CHANGE PHASE CONTROL PAGE (1-4)....._
CHANGE OVERLAP CONTROL PAGE (1-4)...._
CHANGE INPUT PAGE (1-4).............._
CHANGE OUTPUT PAGE (1-4)............._
OVERRIDE PHASE CONTROL FUNCTION (Y)._
```

PROGRAMMING COMPLETE

SPECIAL DETECTOR PROGRAMMING DETAIL - LOOP 1A (ALT.)

(program controller as shown below)

FROM MAIN MENU PRESS '7' (DETECTORS), THEN PRESS '1' FOR VEHICLE DETECTORS. PRESS THE '-' KEY TO GET TO VEHICLE DETECTOR #51.

```
VEHICLE DETECTOR #51  SETTINGS (+-.1-64)
SETTING:                          (Y/N)
ENABLE DETECTOR.....................N
ENABLE LOGGING......................N
ENABLE DIAGNOSTICS..................N
SPEED TRAP..........................N
CALL DETECTOR.......................Y
EXTENSION DETECTOR..................Y
MODE 2 STOP BAR.....................N
SWITCHING DETECTOR..................N
DUPLICATING DETECTOR................N
ENABLE FULL TIME DELAY..............N
IF FAILED, SET MIN RECALL?..........N
IF FAILED, SET MAX1 RECALL?.........N
IF FAILED, SET MAX2 RECALL?.........N
PHASE#          ¦1234567891011121314 1516
PHASES ASSIGNED ¦
SWITCH/DUPLICATE¦
LOOP SIZE (0-255 FT)................6
SPEED TRAP DISTANCE (0-255 FT)......0
STOP BAR TIME (0-255 SEC)...........0
STRETCH (0-25.5 SEC)................0.0
DELAY (0-255 SEC)...................0
MAX CALLS/MIN (0-255)..............255
MIN CALLS/DIAGNOSTIC PERIOD (0-255).0
MAX OCCUPANCY (0-100%).............100
EXTENSION DISABLE TIME (0-255 SEC)..0
QUEUE MAX OCCUPANCY TIME (0-255)....0
QUEUE GAP RESET TIME (0-25.5).......0.0
PREEMPTION INDEX FOR QUEUE (0-10)...0
```

→ ENTER 'Y' FOR ENABLE DETECTOR →

→ ENTER '1' FOR PHASES ASSIGNED →

→ ENSURE DELAY IS '0' →

```
VEHICLE DETECTOR #51  SETTINGS (+-.1-64)
SETTING:                          (Y/N)
ENABLE DETECTOR.....................Y
ENABLE LOGGING......................N
ENABLE DIAGNOSTICS..................N
SPEED TRAP..........................N
CALL DETECTOR.......................Y
EXTENSION DETECTOR..................Y
MODE 2 STOP BAR.....................N
SWITCHING DETECTOR..................N
DUPLICATING DETECTOR................N
ENABLE FULL TIME DELAY..............N
IF FAILED, SET MIN RECALL?..........N
IF FAILED, SET MAX1 RECALL?.........N
IF FAILED, SET MAX2 RECALL?.........N
PHASE#          ¦1234567891011121314 1516
PHASES ASSIGNED ¦X
SWITCH/DUPLICATE¦
LOOP SIZE (0-255 FT)................6
SPEED TRAP DISTANCE (0-255 FT)......0
STOP BAR TIME (0-255 SEC)...........0
STRETCH (0-25.5 SEC)................0.0
DELAY (0-255 SEC)...................0
MAX CALLS/MIN (0-255)..............255
MIN CALLS/DIAGNOSTIC PERIOD (0-255).0
MAX OCCUPANCY (0-100%).............100
EXTENSION DISABLE TIME (0-255 SEC)..0
QUEUE MAX OCCUPANCY TIME (0-255)....0
QUEUE GAP RESET TIME (0-25.5).......0.0
PREEMPTION INDEX FOR QUEUE (0-10)...0
```

DETECTOR PROGRAMMING COMPLETE

NOTE: DETECTOR IS PROGRAMMED PER THE INPUT FILE CONNECTION AND PROGRAMMING CHART SHOWN ON SHEET 1.

THIS ELECTRICAL DETAIL IS FOR
THE SIGNAL DESIGN: 08-0649T4
DESIGNED: JANUARY 2022
SEALED: 4/20/2022
REVISED: N/A

Temporary Design 4 - (TMP Phase III)
Electrical Detail - Sheet 3 of 4

DOCUMENT NOT CONSIDERED FINAL UNLESS ALL SIGNATURES COMPLETED

ELECTRICAL AND PROGRAMMING DETAILS FOR:

Prepared for the Offices of:
NC Department of Transportation Mobility and Safety Division Traffic Engineering Branch Traffic Control & Signals Management Section
750 N.Greenfield Pkwy.Garner,NC 27529

NC 42 (Broadway Road)
at
SR 1529 (Cox Mill Road)
and Bill's Body Shop

Division 8 Lee County Sanford

PLAN DATE:	April 2022	REVIEWED BY:	Todd Joyce
PREPARED BY:	Keith M. Mims	REVIEWED BY:	-

REVISIONS	INIT.	DATE

SEAL
NORTH CAROLINA PROFESSIONAL SEAL 036880 ENGINEER KEITH M. MIMS

DocuSigned by: Keith M. Mims 04/21/2022
SIGNATURE DATE

SIG. INVENTORY NO. 08-0649T4

21-APR-2022 13:44
K:\Projects\08-0649_SHL_016_14_xxxxxx.dgn
kmims

PROJECT REFERENCE NO.	SHEET NO.
R-3830	Sig. 21.4

ALTERNATE PHASING ACTIVATION DETAIL

TO RUN ALT. PHASING DURING COORDINATION - SELECT ALL PAGE CHANGES (AS SHOWN BELOW) WITHIN COORDINATION PLAN PROGRAMMING.

TO RUN ALT. PHASING DURING FREE RUN - PROGRAM PAGE CHANGES (SHOWN BELOW) IN SEPARATE TIME OF DAY EVENTS. IF PAGE 1 IS USED, NO EVENT PROGRAMMING IS NECESSARY FOR THAT PARTICULAR PAGE.

PHASING	INPUTS PAGE	OVERLAPS PAGE
ACTIVE PAGES REQUIRED TO RUN DEFAULT PHASING	1	1
ACTIVE PAGES REQUIRED TO RUN ALTERNATE PHASING	2	2

NOTE: PAGES NOT SHOWN (i.e. sequence, phase control, etc.) SHOULD REMAIN AS '1', OR AS DEFINED BY TIMING ENGINEER.

IMPORTANT: IF ALT. PHASING IS USED DURING FREE RUN AND COORDINATION, DO NOT OPERATE TIME OF DAY PAGE CHANGE EVENTS CONCURRENTLY WITH COORDINATION PLAN EVENTS IN THE EVENT SCHEDULER. (EX. FREE RUN PAGE CHANGE EVENT SHOULD END BEFORE COORDINATION PLAN EVENT STARTS AND VICE-VERSA).

ALTERNATE PHASING PAGE CHANGE SUMMARY

THE FOLLOWING IS A SUMMARY OF WHAT TAKES PLACE WHEN THESE OVERLAP/INPUT PAGE CHANGES ACTIVATE TO CALL THE "ALTERNATE PHASING":

OVERLAPS PAGE 2: Modifies overlap parent phases for head 11 to run protected turns only.

INPUTS PAGE 2: Disables phase 6 call on loop 1A and reduces delay time for phase 1 call on loop 1A to 0 seconds.

THIS ELECTRICAL DETAIL IS FOR THE SIGNAL DESIGN: 08-0649T4
DESIGNED: JANUARY 2022
SEALED: 4/20/2022
REVISED: N/A

Temporary Design 4 - (TMP Phase III)
Electrical Detail - Sheet 4 of 4

DOCUMENT NOT CONSIDERED FINAL UNLESS ALL SIGNATURES COMPLETED

ELECTRICAL AND PROGRAMMING DETAILS FOR:

Prepared for the Offices of:
Transportation Mobility and Safety Division
STATE OF NORTH CAROLINA
DEPARTMENT OF TRANSPORTATION
Signals Management Section
750 N.Greenfield Pkwy,Garner,NC 27529

NC 42 (Broadway Road)
at
SR 1529 (Cox Mill Road)
and Bill's Body Shop

Division 8 Lee County Sanford

PLAN DATE:	April 2022	REVIEWED BY:	Todd Joyce
PREPARED BY:	Keith M. Mims	REVIEWED BY:	-

REVISIONS	INIT.	DATE

SEAL
NORTH CAROLINA PROFESSIONAL SEAL 036880 ENGINEER KEITH M. MIMS

DocuSigned by: Keith M. Mims 04/21/2022
SIGNATURE DATE

SIG. INVENTORY NO. 08-0649T4

21-APR-2022 13:45
.w080649_sm_ele_t4_xxxxxx.dgn
kmmims

PROJECT REFERENCE NO.	SHEET NO.
R-3830	Sig 22.0

DEFAULT PHASING DIAGRAM

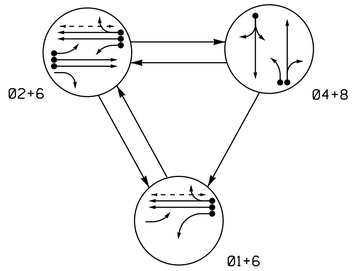

DEFAULT PHASING TABLE OF OPERATION				
SIGNAL FACE	PHASE 01+6	PHASE 02+6	PHASE 04+8	FLASH
11	←	~~F Y~~	~~R~~	~~Y~~
21	~~F Y~~	~~F Y~~	~~R~~	~~Y~~
22, 23	R	G	R	Y
41, 42	R	R	G	R
61, 62	G	G	R	Y
81	~~R~~	~~R~~	~~F Y~~	~~R~~
82, 83, 84	R	R	G	R
P61, P62	W	W	DW	DRK

ALTERNATE PHASING DIAGRAM

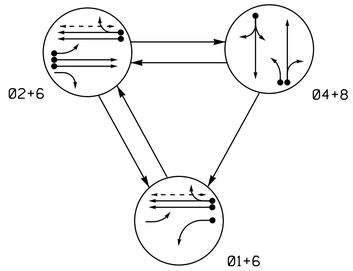

ALTERNATE PHASING TABLE OF OPERATION				
SIGNAL FACE	PHASE 01+6	PHASE 02+6	PHASE 04+8	FLASH
11	←	~~R~~	~~R~~	~~Y~~
21	~~F Y~~	~~F Y~~	~~R~~	~~Y~~
22, 23	R	G	R	Y
41, 42	R	R	G	R
61, 62	G	G	R	Y
81	~~R~~	~~R~~	~~F Y~~	~~R~~
82, 83, 84	R	R	G	R
P61, P62	W	W	DW	DRK

PHASING DIAGRAM DETECTION LEGEND

- DETECTED MOVEMENT
- UNDETECTED MOVEMENT (OVERLAP)
- UNSIGNALIZED MOVEMENT
- PEDESTRIAN MOVEMENT

OASIS 2070 LOOP & DETECTOR INSTALLATION CHART

INDUCTIVE LOOPS						DETECTOR PROGRAMMING							
LOOP	SIZE (FT)	DISTANCE FROM STOPBAR (FT)	TURNS	NEW LOOP		PHASE	CALLING	EXTENSION	FULL TIME DELAY	STRETCH TIME	DELAY TIME	SYSTEM LOOP	NEW CARD
1A	6X40	0	2-4-2	Y		1	Y	Y	-	-	★15	-	Y
						#6	Y	Y	Y	-	3	-	Y
2A	6X6	300	5	Y		2	Y	Y	-	-	-	-	Y
2B	6X6	300	5	Y		2	Y	Y	-	-	-	-	Y
2C	6X40	0	2-4-2	Y		2	Y	Y	Y	-	3	-	Y
4A	6X15	0	2-4-2	Y		4	Y	Y	-	-	10	-	Y
6A	6X6	300	5	Y		6	Y	Y	-	-	-	-	Y
6B	6X6	300	5	Y		6	Y	Y	-	-	-	-	Y
8A	6X40	0	2-4-2	Y		8	Y	Y	-	-	3	-	Y
8B	6X40	0	2-4-2	Y		8	Y	Y	-	-	10	-	Y
S5	6X6	+230	5	Y		-	-	-	-	-	-	Y	Y
S6	6X6	+230	5	Y		-	-	-	-	-	-	Y	Y

★ Disable Delay during Alternate Phasing Operation.
Disable Phase(s) call during Alternate Phasing Operation.

3 Phase
Fully Acutated
(Signal System #: 10823)
(Centracs)

NOTES

1. Refer to "Roadway Standard Drawings NCDOT" dated January 2018 and "Standard Specifications for Roads and Structures" dated January 2018.
2. Do not program signal for late night flashing operation unless otherwise directed by the Engineer.
3. Phase 1 may be lagged.
4. Set all detector units to presence mode.
5. Omit "WALK" and flashing "DON'T WALK" with no pedestrian calls.
6. Program pedestrian heads to countdown the flashing "Don't Walk" time only.
7. The Division Traffic Engineer will determine the hours of use for each phasing plan.
8. Maximum times shown in timing chart are for free-run operation only. Coordinated signal system timing values supersede these values.
9. Closed Loop System Data:
   Controller Asset #: 0649.

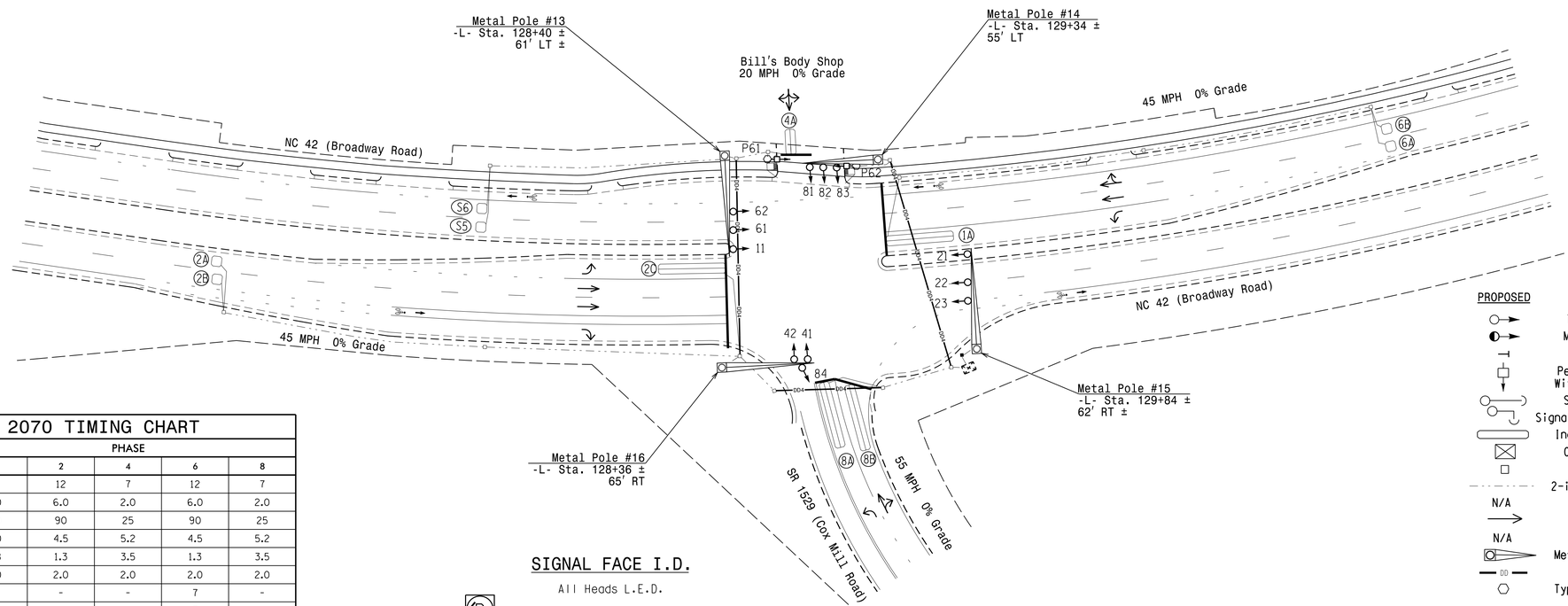

LEGEND

PROPOSED		EXISTING
	Traffic Signal Head	
	Modified Signal Head	N/A
	Sign	
	Pedestrian Signal Head With Push Button & Sign	
	Signal Pole with Guy	
	Signal Pole with Sidewalk Guy	
	Inductive Loop Detector	
	Controller & Cabinet	
	Junction Box	
	2-in Underground Conduit	
N/A	Right of Way	
	Directional Arrow	
N/A	Curb Ramp	
	Metal Pole with Mastarm	
DD	Directional Drill	N/A
	Type II Signal Pedestal	

SIGNAL FACE I.D.

All Heads L.E.D.

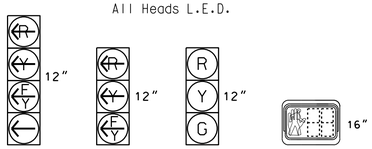

11 | 21, 81 | 22, 23, 41, 42, 61, 62, 82, 83, 84 | P61, P62

OASIS 2070 TIMING CHART

FEATURE	PHASE 1	PHASE 2	PHASE 4	PHASE 6	PHASE 8
Min Green 1 *	7	12	7	12	7
Extension 1 *	2.0	6.0	2.0	6.0	2.0
Max Green 1 *	20	90	25	90	25
Yellow Clearance	3.0	4.5	5.2	4.5	5.2
Red Clearance	2.8	1.3	3.5	1.3	3.5
Red Revert	2.0	2.0	2.0	2.0	2.0
Walk 1 *	-	-	-	7	-
Don't Walk 1	-	-	-	7	-
Seconds Per Actuation *	-	1.5	-	1.5	-
Max Variable Initial *	-	34	-	34	-
Time Before Reduction *	-	15	-	15	-
Time To Reduce *	-	30	-	30	-
Minimum Gap	-	3.2	-	3.2	-
Recall Mode	-	MIN RECALL	-	MIN RECALL	-
Vehicle Call Memory	-	YELLOW	-	YELLOW	-
Dual Entry	-	-	ON	-	ON
Simultaneous Gap	ON	ON	ON	ON	ON

* These values may be field adjusted. Do not adjust Min Green and Extension times for phases 2 and 6 lower than what is shown. Min Green for all other phases should not be lower than 4 seconds.

Signal Upgrade - Final Design

DOCUMENT NOT CONSIDERED FINAL UNLESS ALL SIGNATURES COMPLETED

Prepared in the Offices of:
Transportation Mobility and Safety Division
Traffic Engineering Branch
Signal Design Section
750 N.Greenfield Pkwy.Garner,NC 27529

NC 42 (Broadway Road)
at
SR 1529 (Cox Mill Road)
and Bill's Body Shop

Division 8 Lee County Sanford

PLAN DATE: March 2022 REVIEWED BY:
PREPARED BY: J.A. Lohr REVIEWED BY:

SCALE 0 40 1"=40'

REVISIONS	INIT.	DATE

SEAL
NORTH CAROLINA PROFESSIONAL SEAL 026486 ENGINEER ROBERT J. ZIEMBA
DocuSigned by: 04/20/2022
SIGNATURE DATE
SIG. INVENTORY NO. 08-0649

$$$$$$$YSDATE$$$$$$
20-APR-2022 7:06
J:\Projects\R-3830\Signals\Signal Design Section\Central Region\Div 8\R-3830\2022 revisions\0806649.sig.dsn_20220420.dgn
rziemba

PROJECT REFERENCE NO.	SHEET NO.
R-3830	Sig. 22.1

EDI MODEL 2018ECL-NC CONFLICT MONITOR PROGRAMMING DETAIL

(remove jumpers and set switches as shown)

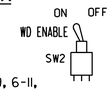

REMOVE DIODE JUMPERS 1-6, 1-9, 1-11, 1-15, 2-6, 2-9, 2-11, 2-15, 4-8, 4-10, 6-9, 6-11, 6-15, 8-10, 9-11, 9-15 and 11-15.

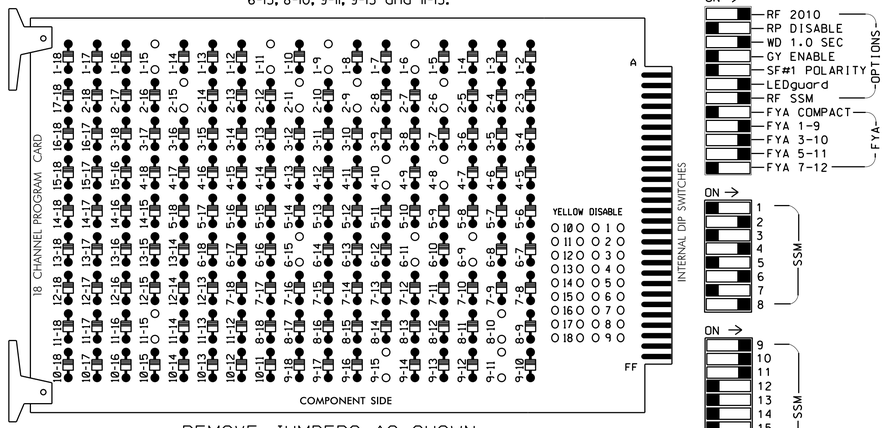

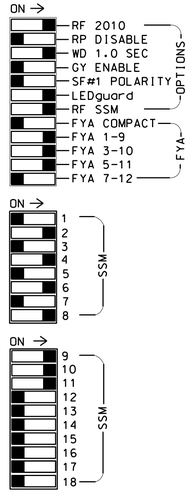

REMOVE JUMPERS AS SHOWN

■ = DENOTES POSITION OF SWITCH

NOTES:

1. Card is provided with all diode jumpers in place. Removal of any jumper allows its channels to run concurrently.
2. Ensure jumpers SEL2-SEL5 and SEL9 are present on the monitor board.
3. Ensure that Red Enable is active at all times during normal operation.
4. Connect serial cable from conflict monitor to comm. port 1 of 2070 controller. Ensure conflict monitor communicates with 2070.

NOTES

1. To prevent "flash-conflict" problems, insert red flash program blocks for all unused vehicle load switches in the output file. The installer shall verify that signal heads flash in accordance with the Signal Plans.
2. Program phases 4 and 8 for Dual Entry.
3. Enable Simultaneous Gap-Out for all Phases.
4. Program phases 2 and 6 for Variable Initial and Gap Reduction.
5. Program phases 2 and 6 for Startup In Green.
6. Program phase 6 for Startup Ped Call.
7. Program phases 2 and 6 for Yellow Flash, and overlaps 1 and 2 as Wag Overlaps.
8. If this signal will be managed by an ATMS software, enable controller and detector logging for all detectors used at this location.
9. The cabinet and controller are part of Signal System 10823.

EQUIPMENT INFORMATION

CONTROLLER.....2070
CABINET.....332 W/ AUX
SOFTWARE.....ECONOLITE OASIS
CABINET MOUNT.....BASE
OUTPUT FILE POSITIONS...18 WITH AUX. OUTPUT FILE
LOAD SWITCHES USED.....S1,S2,S5,S8,S9,S11,AUXS1, AUXS2,AUXS4
PHASES USED.....1,2,4,6,6PED,8
OVERLAP "A".....1+2
OVERLAP "B".....4
OVERLAP "C".....6
OVERLAP "D".....NOT USED

SIGNAL HEAD HOOK-UP CHART

LOAD SWITCH NO.	S1	S2	S3	S4	S5	S6	S7	S8	S9	S10	S11	S12	AUX S1	AUX S2	AUX S3	AUX S4	AUX S5	AUX S6
CMU CHANNEL NO.	1	2	13	3	4	14	5	6	15	7	8	16	9	10	17	11	12	18
PHASE	1	2	2 PED	3	4	4 PED	5	6	6 PED	7	8	8 PED	OLA	OLB	SPARE	OLC	OLD	SPARE
SIGNAL HEAD NO.	11 ★	22,23	NU	NU	41,42	NU	NU	61,62	P61, P62	NU	82,83, 84	NU	11 ★	81 ★	NU	21 ★	NU	NU
RED		128			101			134			107							
YELLOW	✳	129			102			135			108							
GREEN		130			103			136			109							
RED ARROW													A121	A124		A114		
YELLOW ARROW													A122	A125		A115		
FLASHING YELLOW ARROW													A123	A126		A116		
GREEN ARROW	127																	
✋									119									
🚶									121									

NU = Not Used

✳ Denotes install load resistor. See load resistor installation detail this sheet.

★ See pictorial of head wiring in detail this sheet.

FYA SIGNAL WIRING DETAIL

(wire signal heads as shown)

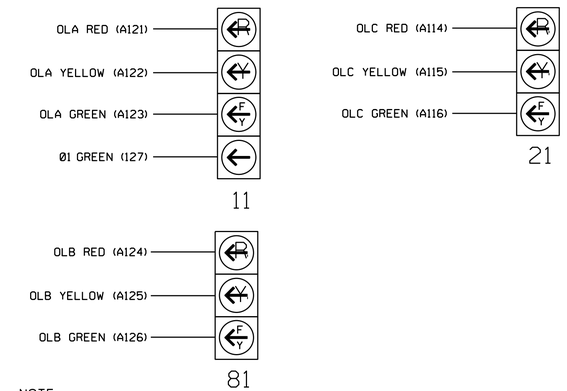

NOTE

The sequence display for signal head 11 requires special logic programming. See sheet 2 for programming instructions.

INPUT FILE POSITION LAYOUT

(front view)

		1	2	3	4	5	6	7	8	9	10	11	12	13	14
FILE "I"	U	Ø 1 1A	Ø 2 2A	SLOT EMPTY	SLOT EMPTY	SLOT EMPTY	Ø 4 4A	SLOT EMPTY	SLOT EMPTY	SYS. DET. S5	SLOT EMPTY	SLOT EMPTY	SLOT EMPTY	Ø6 PED DC ISOLATOR	FS DC ISOLATOR
	L	NOT USED	Ø 2 2B				NOT USED			SYS. DET. S6				NOT USED	ST DC ISOLATOR
FILE "J"	U	SLOT EMPTY	Ø 6 6A	SLOT EMPTY	WIRED INPUT ⊗	SLOT EMPTY	Ø 8 8A	SLOT EMPTY	SLOT EMPTY	SLOT EMPTY	SLOT EMPTY	SLOT EMPTY	SLOT EMPTY	SLOT EMPTY	SLOT EMPTY
	L		Ø 6 6B				Ø 8 8B								

EX.: 1A, 2A, ETC. = LOOP NO.'S

FS = FLASH SENSE
ST = STOP TIME

⊗ Wired Input - Do not populate slot with detector card

INPUT FILE CONNECTION & PROGRAMMING CHART

LOOP NO.	LOOP TERMINAL	INPUT FILE POS.	PIN NO.	INPUT ASSIGNMENT NO.	DETECTOR NO.	NEMA PHASE	CALL	EXTEND	FULL TIME DELAY	STRETCH TIME	DELAY TIME
1A[1]	TB2-1,2	I1U	56	18	1	1	Y	Y			15
	-	J4U	48	10 ★	26	6	Y	Y	Y		3
	-	I1U	56	18 ★	51	1	Y	Y			
2A	TB2-5,6	I2U	39	1	2	2	Y	Y			
2B	TB2-7,8	I2L	43	5	12	2	Y	Y			
2C	TB2-9,10	I3U	63	25	32	2	Y	Y			3
4A	TB4-9,10	I6U	41	3	4	4	Y	Y			10
6A	TB3-5,6	J2U	40	2	6	6	Y	Y			
6B	TB3-7,8	J2L	44	6	16	6	Y	Y			
8A	TB5-9,10	J6U	42	4	8	8	Y	Y			3
8B	TB5-11,12	J6L	46	8	18	8	Y	Y			10
✳ S5	TB6-9,10	I9U	60	22	11	SYS					
✳ S6	TB6-11,12	I9L	62	24	13	SYS					
PED PUSH BUTTONS											
P61,P62	TB8-7,9	I13U	68	30	PED 6	6 PED					

NOTE:
INSTALL DC ISOLATOR IN INPUT FILE SLOT I13.

[1] Add jumper from I1-W to J4-W, on rear of input file.

★ See Input Page Assignment programming details on sheet 3.

✳ System detector only. Remove the vehicle phase assigned to this detector in the default programming.

INPUT FILE POSITION LEGEND: J2L
FILE J
SLOT 2
LOWER

LOAD RESISTOR INSTALLATION DETAIL

(install resistor as shown below)

ACCEPTABLE VALUES	
VALUE (ohms)	WATTAGE
1.5K - 1.9K	25W (min)
2.0K - 3.0K	10W (min)

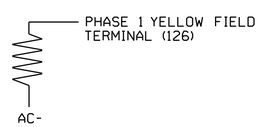

THIS ELECTRICAL DETAIL IS FOR
THE SIGNAL DESIGN: 08-0649
DESIGNED: MARCH 2022
SEALED: 4/20/2022
REVISED: N/A

Final Design
Electrical Detail - Sheet 1 of 4

DOCUMENT NOT CONSIDERED FINAL UNLESS ALL SIGNATURES COMPLETED

ELECTRICAL AND PROGRAMMING DETAILS FOR:

Prepared for the Offices of:
NC Department of Transportation, Mobility and Safety Division, Traffic Engineering Branch, Signals Management Section
750 N.Greenfield Pkwy.Garner,NC 27529

NC 42 (Broadway Road)
at
SR 1529 (Cox Mill Road)
and Bill's Body Shop
Division 8 Lee County Sanford

PLAN DATE:	April 2022	REVIEWED BY:	Todd Joyce
PREPARED BY:	Keith M. Mims	REVIEWED BY:	-

REVISIONS	INIT.	DATE

SEAL
NORTH CAROLINA PROFESSIONAL SEAL 036880 ENGINEER KEITH M. MIMS

DocuSigned by: Keith M. Mims 04/21/2022
SIGNATURE DATE

SIG. INVENTORY NO. 08-0649

21-APR-2022 14:25
S:\Work\Groups\Sig Mgmt\Projects From Signal Design\Active Projects\Mims\In-house\08-0649\M08649_sht_ele.xxxxx.dgn
kmims

PROJECT REFERENCE NO.	SHEET NO.
R-3830	Sig. 22.2

LOGICAL I/O PROCESSOR PROGRAMMING DETAIL TO PRODUCE SPECIAL FYA-PPLT SIGNAL SEQUENCE

(program controller as shown below)

1. FROM MAIN MENU PRESS '2' (PHASE CONTROL), THEN '1' (PHASE CONTROL FUNCTIONS). SCROLL TO THE BOTTOM OF THE MENU AND ENABLE ACT LOGIC COMMANDS 1, 2, AND 3.

2. FROM MAIN MENU PRESS '6' (OUTPUTS), THEN '3' (LOGICAL I/O PROCESSOR).

```
  LOGICAL I/O COMMAND #1  (+/-COMMAND#)
IF  ACTIVE PHASE       #1  IS ON
AND RED CLEAR ON PHASE #1  IS ON

                SCROLL DOWN

THEN:
SET OUTPUT  ASSIGNMENT #50 ON
SET OUTPUT  ASSIGNMENT #51 OFF
```

NOTE: LOGIC FOR PHASE 1 RED CLEAR WHEN TRANSITIONING FROM PHASE 1 TO PHASE 2 (HEAD 11).

PRESS '+'

```
  LOGICAL I/O COMMAND #2  (+/-COMMAND#)
IF  ACTIVE PHASE       #1  IS ON

                SCROLL DOWN

THEN:
SET OUTPUT  ASSIGNMENT #52 OFF
```

NOTE: LOGIC FOR SWITCHING FLASHING YELLOW ARROW OFF DURING PHASE 1 (HEAD 11).

PRESS '+'

```
  LOGICAL I/O COMMAND #3  (+/-COMMAND#)
IF  YELLOW ON PHASE    #1  IS ON

                SCROLL DOWN

THEN:
SET OUTPUT  ASSIGNMENT #51 ON
```

NOTE: LOGIC FOR YELLOW ARROW CLEARANCE FROM PHASE 1 (HEAD 11).

LOGIC I/O PROCESSOR PROGRAMMING COMPLETE

OUTPUT REFERENCE SCHEDULE

OUTPUT 50 = Overlap A Red
OUTPUT 51 = Overlap A Yellow
OUTPUT 52 = Overlap A Green

COUNTDOWN PEDESTRIAN SIGNAL OPERATION

Countdown Ped Signals are required to display timing only during Ped Clearance Interval. Consult Ped Signal Module user's manual for instructions on selecting this feature.

FLASHER CIRCUIT MODIFICATION DETAIL

IN ORDER TO INSURE THAT SIGNALS FLASH CONCURRENTLY ON THE SAME APPROACH, MAKE THE FOLLOWING FLASHER CIRCUIT CHANGES:

1. ON REAR OF PDA - REMOVE WIRE FROM TERM. T2-4 AND TERMINATE ON T2-2.
2. ON REAR OF PDA - REMOVE WIRE FROM TERM. T2-5 AND TERMINATE ON T2-3.
3. REMOVE FLASHER UNIT 2.

THE CHANGES LISTED ABOVE TIES ALL PHASES AND OVERLAPS TO FLASHER UNIT 1.

OVERLAP PROGRAMMING DETAIL FOR DEFAULT PHASING

(program controller as shown below)

FROM MAIN MENU PRESS '8' (OVERLAPS), THEN '1' (VEHICLE OVERLAP SETTINGS).

```
 PAGE 1: VEHICLE OVERLAP 'A' SETTINGS
 PHASE:          :1234567891011121314151 6
VEH OVL PARENTS::XX
VEH OVL NOT VEH::
VEH OVL NOT PED::
VEH OVL GRN EXT::
STARTUP COLOR: _ RED  _ YELLOW  _ GREEN
FLASH COLORS:  _ RED  _ YELLOW  X GREEN
SELECT VEHICLE OVERLAP OPTIONS:   (Y/N)
FLASH YELLOW IN CONTROLLER FLASH?...Y
GREEN EXTENSION (0-255 SEC).....0
YELLOW CLEAR (0=PARENT,3-25.5 SEC)..0.0
RED CLEAR (0=PARENT,0.1-25.5 SEC)...0.0
OUTPUT AS PHASE # (0=NONE, 1-16)....0
```

NOTICE GREEN FLASH

PRESS '+'

```
 PAGE 1: VEHICLE OVERLAP 'B' SETTINGS
 PHASE:          :1234567891011121314151 6
VEH OVL PARENTS::   X
VEH OVL NOT VEH::
VEH OVL NOT PED::
VEH OVL GRN EXT::
STARTUP COLOR: _ RED  _ YELLOW  _ GREEN
FLASH COLORS:  _ RED  _ YELLOW  X GREEN
SELECT VEHICLE OVERLAP OPTIONS:   (Y/N)
FLASH YELLOW IN CONTROLLER FLASH?...N
GREEN EXTENSION (0-255 SEC).....0
YELLOW CLEAR (0=PARENT,3-25.5 SEC)..0.0
RED CLEAR (0=PARENT,0.1-25.5 SEC)...0.0
OUTPUT AS PHASE # (0=NONE, 1-16)....0
```

NOTICE GREEN FLASH

PRESS '+'

```
 PAGE 1: VEHICLE OVERLAP 'C' SETTINGS
 PHASE:          :1234567891011121314151 6
VEH OVL PARENTS::     X
VEH OVL NOT VEH::
VEH OVL NOT PED::
VEH OVL GRN EXT::
STARTUP COLOR: _ RED  _ YELLOW  _ GREEN
FLASH COLORS:  _ RED  _ YELLOW  X GREEN
SELECT VEHICLE OVERLAP OPTIONS:   (Y/N)
FLASH YELLOW IN CONTROLLER FLASH?...Y
GREEN EXTENSION (0-255 SEC).....0
YELLOW CLEAR (0=PARENT,3-25.5 SEC)..0.0
RED CLEAR (0=PARENT,0.1-25.5 SEC)...0.0
OUTPUT AS PHASE # (0=NONE, 1-16)....0
```

NOTICE GREEN FLASH

OVERLAP PROGRAMMING COMPLETE

OVERLAP PROGRAMMING DETAIL FOR ALTERNATE PHASING

(program controller as shown below)

FROM MAIN MENU PRESS '8' (OVERLAPS), THEN '1' (VEHICLE OVERLAP SETTINGS). PRESS 'NEXT' TO ADVANCE TO PAGE 2.

NOTICE PAGE 2

```
 PAGE 2: VEHICLE OVERLAP 'A' SETTINGS
 PHASE:          :1234567891011121314151 6
VEH OVL PARENTS::X
VEH OVL NOT VEH::
VEH OVL NOT PED::
VEH OVL GRN EXT::
STARTUP COLOR: _ RED  _ YELLOW  _ GREEN
FLASH COLORS:  _ RED  _ YELLOW  _ GREEN
SELECT VEHICLE OVERLAP OPTIONS:   (Y/N)
FLASH YELLOW IN CONTROLLER FLASH?...Y
GREEN EXTENSION (0-255 SEC).....0
YELLOW CLEAR (0=PARENT,3-25.5 SEC)..0.0
RED CLEAR (0=PARENT,0.1-25.5 SEC)...0.0
OUTPUT AS PHASE # (0=NONE, 1-16)....0
```

PRESS '+'

NOTICE PAGE 2

```
 PAGE 2: VEHICLE OVERLAP 'B' SETTINGS
 PHASE:          :1234567891011121314151 6
VEH OVL PARENTS::   X
VEH OVL NOT VEH::
VEH OVL NOT PED::
VEH OVL GRN EXT::
STARTUP COLOR: _ RED  _ YELLOW  _ GREEN
FLASH COLORS:  _ RED  _ YELLOW  X GREEN
SELECT VEHICLE OVERLAP OPTIONS:   (Y/N)
FLASH YELLOW IN CONTROLLER FLASH?...N
GREEN EXTENSION (0-255 SEC).....0
YELLOW CLEAR (0=PARENT,3-25.5 SEC)..0.0
RED CLEAR (0=PARENT,0.1-25.5 SEC)...0.0
OUTPUT AS PHASE # (0=NONE, 1-16)....0
```

NOTICE GREEN FLASH

PRESS '+'

NOTICE PAGE 2

```
 PAGE 2: VEHICLE OVERLAP 'C' SETTINGS
 PHASE:          :1234567891011121314151 6
VEH OVL PARENTS::     X
VEH OVL NOT VEH::
VEH OVL NOT PED::
VEH OVL GRN EXT::
STARTUP COLOR: _ RED  _ YELLOW  _ GREEN
FLASH COLORS:  _ RED  _ YELLOW  X GREEN
SELECT VEHICLE OVERLAP OPTIONS:   (Y/N)
FLASH YELLOW IN CONTROLLER FLASH?...Y
GREEN EXTENSION (0-255 SEC).....0
YELLOW CLEAR (0=PARENT,3-25.5 SEC)..0.0
RED CLEAR (0=PARENT,0.1-25.5 SEC)...0.0
OUTPUT AS PHASE # (0=NONE, 1-16)....0
```

NOTICE GREEN FLASH

OVERLAP PROGRAMMING COMPLETE

THIS ELECTRICAL DETAIL IS FOR
THE SIGNAL DESIGN: 08-0649
DESIGNED: MARCH 2022
SEALED: 4/20/2022
REVISED: N/A

Final Design
Electrical Detail - Sheet 2 of 4

DOCUMENT NOT CONSIDERED FINAL UNLESS ALL SIGNATURES COMPLETED

ELECTRICAL AND PROGRAMMING DETAILS FOR:

Prepared for the Offices of:

NC Department of Transportation, Mobility and Safety Division, Traffic Engineering Branch, Signals Management Section

750 N.Greenfield Pkwy.Garner,NC 27529

NC 42 (Broadway Road)
at
SR 1529 (Cox Mill Road)
and Bill's Body Shop

Division 8 Lee County Sanford

PLAN DATE:	April 2022	REVIEWED BY:	Todd Joyce
PREPARED BY:	Keith M. Mims	REVIEWED BY:	-

REVISIONS	INIT.	DATE

SEAL

NORTH CAROLINA PROFESSIONAL SEAL 036880 ENGINEER KEITH M. MIMS

DocuSigned by: Keith M. Mims 04/21/2022

SIGNATURE DATE

SIG. INVENTORY NO. 08-0649

21-APR-2022 14:26
R-3830_Sig.08.xxxxxx.dgn
kmims

PROJECT REFERENCE NO.	SHEET NO.
R-3830	Sig. 22.3

INPUT PAGE 2 ASSIGNMENT PROGRAMMING DETAIL FOR ALTERNATE PHASING - LOOP 1A

(program controller as shown below)

NOTES: 1. THIS PROGRAMMING APPLIES FOR INPUT PAGE 2 ONLY. INPUT PAGE 1 WILL USE STANDARD DEFAULT SETTINGS. THIS PROGRAMMING IS NECESSARY FOR PROPER DETECTOR OPERATION DURING ALTERNATE PHASING OPERATION.

2. THE FIRST TASK THIS PROGRAMMING ACCOMPLISHES IS THE DISABLING OF INPUT #10 (DETECTOR 26) SO THAT A VEHICLE CALL WILL NOT BE PLACED TO PHASE 6 DURING ALTERNATE PHASING OPERATION. THE SECOND TASK THIS PROGRAMMING ACCOMPLISHES IS THAT IT REASSIGNS DETECTOR 51 TO INPUT #18 SO THAT THE DELAY ON LOOP 1A CAN BE REDUCED FROM 15 SECONDS TO 0 SECONDS.

FROM MAIN MENU PRESS '5' (INPUTS), THEN PRESS 'NEXT' TO GET TO INPUT PAGE '2'. PRESS THE '+' KEY UNTIL INPUT 10 IS REACHED.

```
PAGE: 2 C1 PIN:48  VEHICLE DETECTOR
INPUT ASSIGNMENT #.................10
DEBOUNCE TIME (0-25.5 SEC).........0.5
DELAY TIME (0-25.5 SEC).............0.0
HOLD-OVER TIME (0-25.5 SEC).........0.0
ASSIGNMENT SELECTION:
NOT ENABLED (Y/N)...................Y
VEHICLE DETECTOR (1-64).............26
PEDESTRIAN DETECTOR (1-16).........._
ALTERNATE PED DETECTOR (1-16)......._
PREEMPT (1-10)......................._
INVERTED PREEMPT (1-10).............._
STOP TIME (Y/N)......................_
FLASH SENSE (Y/N)...................._
DOOR OPEN (Y/N)......................_
MANUAL CONTROL ENABLE (Y/N).........._
MANUAL CONTROL ADVANCE (Y/N)........._
SPECIAL FUNCTION ALARM (1-8)........_
TOD HOUR SYCHRONIZATION (0-23)......_
FORCE OFF RING (1-4)................_
HOLD PHASES (1-16)..................._
PLAN (65=FLSH,66=FREE)..._  OFFSET#.._
CHANGE PHASE SEQUENCE PAGE (1-12)...._
CHANGE PHASE TIMING PAGE (1-4)......._
CHANGE PHASE CONTROL PAGE (1-4)......_
CHANGE OVERLAP CONTROL PAGE (1-4)...._
CHANGE INPUT PAGE (1-4).............._
CHANGE OUTPUT PAGE (1-4)............._
OVERRIDE PHASE CONTROL FUNCTION (Y)._
```

→ ENTER A 'Y' FOR NOT ENABLED →

DEFAULT DETECTOR NUMBER WILL REMAIN UNTIL 'NOT ENABLED' IS ENTERED.

(LOOP 1A - PHASE 6)

```
PAGE: 2 C1 PIN:48  NOT ENABLED
INPUT ASSIGNMENT #.................10
DEBOUNCE TIME (0-25.5 SEC).........0.5
DELAY TIME (0-25.5 SEC).............0.0
HOLD-OVER TIME (0-25.5 SEC).........0.0
ASSIGNMENT SELECTION:
NOT ENABLED (Y/N)...................Y
VEHICLE DETECTOR (1-64).............._
PEDESTRIAN DETECTOR (1-16).........._
ALTERNATE PED DETECTOR (1-16)......._
PREEMPT (1-10)......................._
INVERTED PREEMPT (1-10).............._
STOP TIME (Y/N)......................_
FLASH SENSE (Y/N)...................._
DOOR OPEN (Y/N)......................_
MANUAL CONTROL ENABLE (Y/N).........._
MANUAL CONTROL ADVANCE (Y/N)........._
SPECIAL FUNCTION ALARM (1-8)........_
TOD HOUR SYCHRONIZATION (0-23)......_
FORCE OFF RING (1-4)................_
HOLD PHASES (1-16)..................._
PLAN (65=FLSH,66=FREE)..._  OFFSET#.._
CHANGE PHASE SEQUENCE PAGE (1-12)...._
CHANGE PHASE TIMING PAGE (1-4)......._
CHANGE PHASE CONTROL PAGE (1-4)......_
CHANGE OVERLAP CONTROL PAGE (1-4)...._
CHANGE INPUT PAGE (1-4).............._
CHANGE OUTPUT PAGE (1-4)............._
OVERRIDE PHASE CONTROL FUNCTION (Y)._
```

PRESS '+' TO ADVANCE TO INPUT 18

```
PAGE: 2 C1 PIN:56  VEHICLE DETECTOR
INPUT ASSIGNMENT #.................18
DEBOUNCE TIME (0-25.5 SEC).........0.5
DELAY TIME (0-25.5 SEC).............0.0
HOLD-OVER TIME (0-25.5 SEC).........0.0
ASSIGNMENT SELECTION:
NOT ENABLED (Y/N)...................._
VEHICLE DETECTOR (1-64).............1
PEDESTRIAN DETECTOR (1-16).........._
ALTERNATE PED DETECTOR (1-16)......._
PREEMPT (1-10)......................._
INVERTED PREEMPT (1-10).............._
STOP TIME (Y/N)......................_
FLASH SENSE (Y/N)...................._
DOOR OPEN (Y/N)......................_
MANUAL CONTROL ENABLE (Y/N).........._
MANUAL CONTROL ADVANCE (Y/N)........._
SPECIAL FUNCTION ALARM (1-8)........_
TOD HOUR SYCHRONIZATION (0-23)......_
FORCE OFF RING (1-4)................_
HOLD PHASES (1-16)..................._
PLAN (65=FLSH,66=FREE)..._  OFFSET#.._
CHANGE PHASE SEQUENCE PAGE (1-12)...._
CHANGE PHASE TIMING PAGE (1-4)......._
CHANGE PHASE CONTROL PAGE (1-4)......_
CHANGE OVERLAP CONTROL PAGE (1-4)...._
CHANGE INPUT PAGE (1-4).............._
CHANGE OUTPUT PAGE (1-4)............._
OVERRIDE PHASE CONTROL FUNCTION (Y)._
```

ENTER '51' TO REASSIGN THE VEHICLE DETECTOR FOR THIS INPUT →

(LOOP 1A - PHASE 1)

```
PAGE: 2 C1 PIN:56  VEHICLE DETECTOR
INPUT ASSIGNMENT #.................18
DEBOUNCE TIME (0-25.5 SEC).........0.5
DELAY TIME (0-25.5 SEC).............0.0
HOLD-OVER TIME (0-25.5 SEC).........0.0
ASSIGNMENT SELECTION:
NOT ENABLED (Y/N)...................._
VEHICLE DETECTOR (1-64).............51
PEDESTRIAN DETECTOR (1-16).........._
ALTERNATE PED DETECTOR (1-16)......._
PREEMPT (1-10)......................._
INVERTED PREEMPT (1-10).............._
STOP TIME (Y/N)......................_
FLASH SENSE (Y/N)...................._
DOOR OPEN (Y/N)......................_
MANUAL CONTROL ENABLE (Y/N).........._
MANUAL CONTROL ADVANCE (Y/N)........._
SPECIAL FUNCTION ALARM (1-8)........_
TOD HOUR SYCHRONIZATION (0-23)......_
FORCE OFF RING (1-4)................_
HOLD PHASES (1-16)..................._
PLAN (65=FLSH,66=FREE)..._  OFFSET#.._
CHANGE PHASE SEQUENCE PAGE (1-12)...._
CHANGE PHASE TIMING PAGE (1-4)......._
CHANGE PHASE CONTROL PAGE (1-4)......_
CHANGE OVERLAP CONTROL PAGE (1-4)...._
CHANGE INPUT PAGE (1-4).............._
CHANGE OUTPUT PAGE (1-4)............._
OVERRIDE PHASE CONTROL FUNCTION (Y)._
```

PROGRAMMING COMPLETE

SPECIAL DETECTOR PROGRAMMING DETAIL - LOOP 1A (ALT.)

(program controller as shown below)

FROM MAIN MENU PRESS '7' (DETECTORS), THEN PRESS '1' FOR VEHICLE DETECTORS. PRESS THE '-' KEY TO GET TO VEHICLE DETECTOR #51.

```
VEHICLE DETECTOR #51  SETTINGS (+-.1-64)
SETTING:                          (Y/N)
ENABLE DETECTOR.....................N
ENABLE LOGGING......................N
ENABLE DIAGNOSTICS..................N
SPEED TRAP..........................N
CALL DETECTOR.......................Y
EXTENSION DETECTOR..................Y
MODE 2 STOP BAR.....................N
SWITCHING DETECTOR..................N
DUPLICATING DETECTOR................N
ENABLE FULL TIME DELAY..............N
IF FAILED, SET MIN RECALL?..........N
IF FAILED, SET MAX1 RECALL?.........N
IF FAILED, SET MAX2 RECALL?.........N
PHASE#          ¦12345678910111213141516
PHASES ASSIGNED ¦
SWITCH/DUPLICATE¦
LOOP SIZE (0-255 FT)................6
SPEED TRAP DISTANCE (0-255 FT)......0
STOP BAR TIME (0-255 SEC)...........0
STRETCH (0-25.5 SEC)................0.0
DELAY (0-255 SEC)...................0
MAX CALLS/MIN (0-255)..............255
MIN CALLS/DIAGNOSTIC PERIOD (0-255).0
MAX OCCUPANCY (0-100%).............100
EXTENSION DISABLE TIME (0-255 SEC)..0
QUEUE MAX OCCUPANCY TIME (0-255)....0
QUEUE GAP RESET TIME (0-25.5).......0.0
PREEMPTION INDEX FOR QUEUE (0-10)...0
```

→ ENTER 'Y' FOR ENABLE DETECTOR →

ENTER '1' FOR PHASES ASSIGNED →

ENSURE DELAY IS '0' →

```
VEHICLE DETECTOR #51  SETTINGS (+-.1-64)
SETTING:                          (Y/N)
ENABLE DETECTOR.....................Y
ENABLE LOGGING......................N
ENABLE DIAGNOSTICS..................N
SPEED TRAP..........................N
CALL DETECTOR.......................Y
EXTENSION DETECTOR..................Y
MODE 2 STOP BAR.....................N
SWITCHING DETECTOR..................N
DUPLICATING DETECTOR................N
ENABLE FULL TIME DELAY..............N
IF FAILED, SET MIN RECALL?..........N
IF FAILED, SET MAX1 RECALL?.........N
IF FAILED, SET MAX2 RECALL?.........N
PHASE#          ¦12345678910111213141516
PHASES ASSIGNED ¦X
SWITCH/DUPLICATE¦
LOOP SIZE (0-255 FT)................6
SPEED TRAP DISTANCE (0-255 FT)......0
STOP BAR TIME (0-255 SEC)...........0
STRETCH (0-25.5 SEC)................0.0
DELAY (0-255 SEC)...................0
MAX CALLS/MIN (0-255)..............255
MIN CALLS/DIAGNOSTIC PERIOD (0-255).0
MAX OCCUPANCY (0-100%).............100
EXTENSION DISABLE TIME (0-255 SEC)..0
QUEUE MAX OCCUPANCY TIME (0-255)....0
QUEUE GAP RESET TIME (0-25.5).......0.0
PREEMPTION INDEX FOR QUEUE (0-10)...0
```

DETECTOR PROGRAMMING COMPLETE

NOTE: DETECTOR IS PROGRAMMED PER THE INPUT FILE CONNECTION AND PROGRAMMING CHART SHOWN ON SHEET 1.

THIS ELECTRICAL DETAIL IS FOR
THE SIGNAL DESIGN: 08-0649
DESIGNED: MARCH 2022
SEALED: 4/20/2022
REVISED: N/A

Final Design
Electrical Detail - Sheet 3 of 4

DOCUMENT NOT CONSIDERED FINAL UNLESS ALL SIGNATURES COMPLETED

ELECTRICAL AND PROGRAMMING DETAILS FOR:

Prepared for the Offices of:
NC Department of Transportation Mobility and Safety Division Traffic Engineering Branch Traffic Control & Signals Management Section
750 N.Greenfield Pkwy,Garner,NC 27529

NC 42 (Broadway Road)
at
SR 1529 (Cox Mill Road)
and Bill's Body Shop

Division 8 | Lee County | Sanford

PLAN DATE: April 2022 | REVIEWED BY: Todd Joyce
PREPARED BY: Keith M. Mims | REVIEWED BY: -

REVISIONS	INIT.	DATE

SEAL
NORTH CAROLINA PROFESSIONAL SEAL 036880 ENGINEER KEITH M. MIMS

DocuSigned by:
Keith M. Mims 04/21/2022
SIGNATURE DATE

SIG. INVENTORY NO. 08-0649

21-APR-2022 14:26
K:\08649_SHL_010_xxxxxx.dgn
kmims

PROJECT REFERENCE NO.	SHEET NO.
R-3830	Sig. 22.4

ALTERNATE PHASING ACTIVATION DETAIL

TO RUN ALT. PHASING DURING COORDINATION - SELECT ALL PAGE CHANGES (AS SHOWN BELOW) WITHIN COORDINATION PLAN PROGRAMMING.

TO RUN ALT. PHASING DURING FREE RUN - PROGRAM PAGE CHANGES (SHOWN BELOW) IN SEPARATE TIME OF DAY EVENTS. IF PAGE 1 IS USED, NO EVENT PROGRAMMING IS NECESSARY FOR THAT PARTICULAR PAGE.

PHASING	INPUTS PAGE	OVERLAPS PAGE
ACTIVE PAGES REQUIRED TO RUN DEFAULT PHASING	1	1
ACTIVE PAGES REQUIRED TO RUN ALTERNATE PHASING	2	2

NOTE: PAGES NOT SHOWN (i.e. sequence, phase control, etc.) SHOULD REMAIN AS '1', OR AS DEFINED BY TIMING ENGINEER.

IMPORTANT: IF ALT. PHASING IS USED DURING FREE RUN AND COORDINATION, DO NOT OPERATE TIME OF DAY PAGE CHANGE EVENTS CONCURRENTLY WITH COORDINATION PLAN EVENTS IN THE EVENT SCHEDULER. (EX. FREE RUN PAGE CHANGE EVENT SHOULD END BEFORE COORDINATION PLAN EVENT STARTS AND VICE-VERSA).

ALTERNATE PHASING PAGE CHANGE SUMMARY

THE FOLLOWING IS A SUMMARY OF WHAT TAKES PLACE WHEN THESE OVERLAP/INPUT PAGE CHANGES ACTIVATE TO CALL THE "ALTERNATE PHASING":

OVERLAPS PAGE 2: Modifies overlap parent phases for head 11 to run protected turns only.

INPUTS PAGE 2: Disables phase 6 call on loop 1A and reduces delay time for phase 1 call on loop 1A to 0 seconds.

THIS ELECTRICAL DETAIL IS FOR THE SIGNAL DESIGN: 08-0649
DESIGNED: MARCH 2022
SEALED: 4/20/2022
REVISED: N/A

Final Design
Electrical Detail - Sheet 4 of 4

DOCUMENT NOT CONSIDERED FINAL UNLESS ALL SIGNATURES COMPLETED

ELECTRICAL AND PROGRAMMING DETAILS FOR:

Prepared for the Offices of:
Transportation Mobility and Safety Division
STATE OF NORTH CAROLINA
DEPARTMENT OF TRANSPORTATION
Signals Management Section
750 N.Greenfield Pkwy,Garner,NC 27529

NC 42 (Broadway Road)
at
SR 1529 (Cox Mill Road)
and Bill's Body Shop
Division 8 Lee County Sanford

PLAN DATE:	April 2022	REVIEWED BY:	Todd Joyce
PREPARED BY:	Keith M. Mims	REVIEWED BY:	-

REVISIONS	INIT.	DATE

SEAL
NORTH CAROLINA PROFESSIONAL SEAL 036880 ENGINEER KEITH M. MIMS
DocuSigned by: Keith M. Mims 04/21/2022
SIGNATURE DATE
SIG. INVENTORY NO. 08-0649

21-APR-2022 14:27
.w080649_sm_ele_xxxxxx.dgn
kmmims

Design Loading for METAL POLE NO. 13

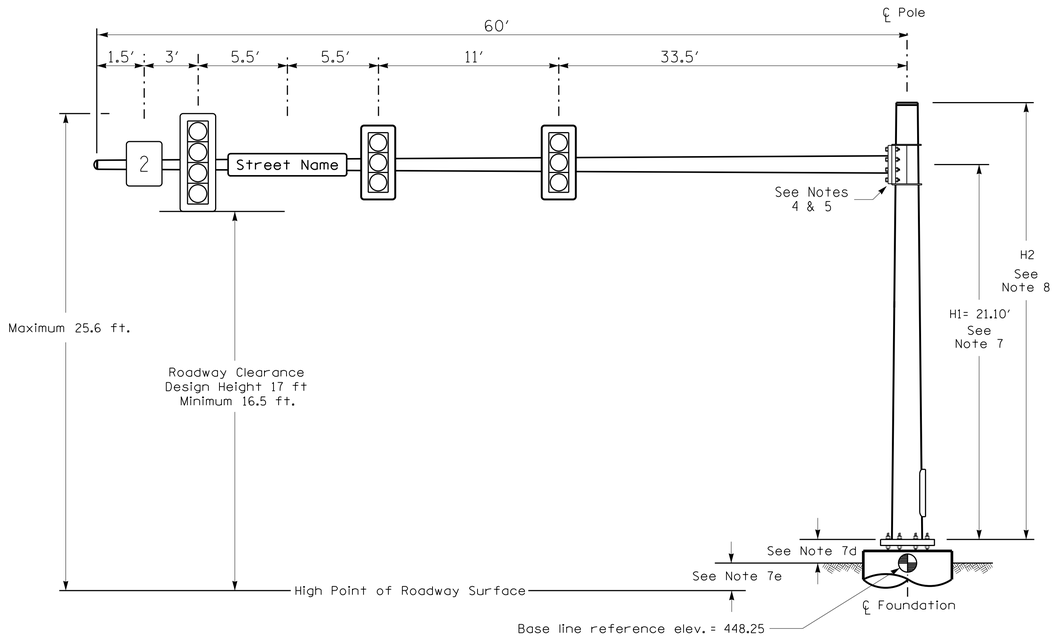

Elevation View

Design Loading for METAL POLE NO. 14

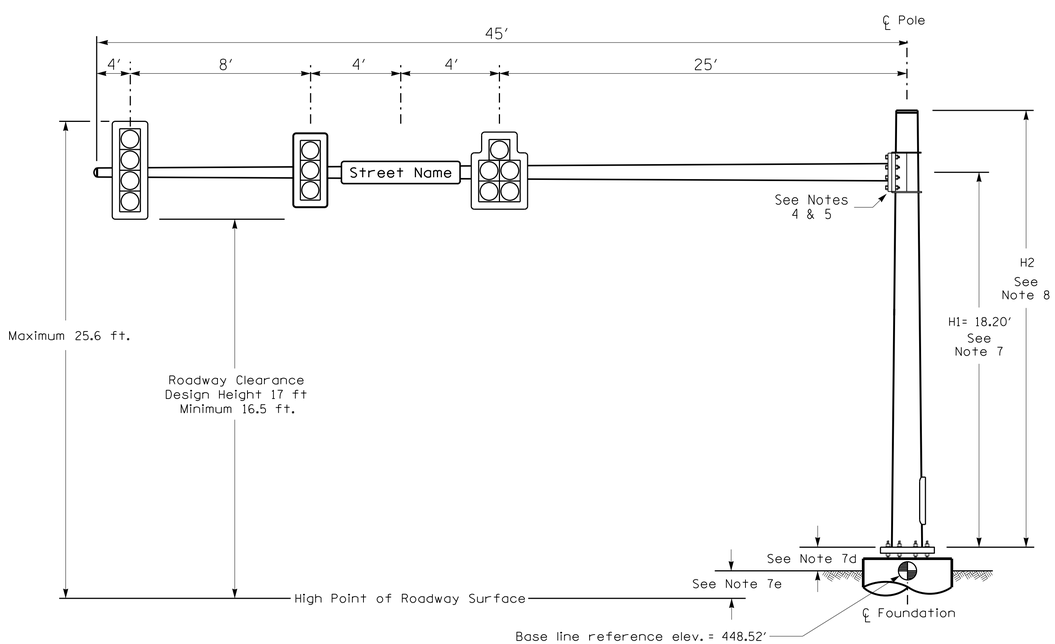

Elevation View

SPECIAL NOTE

The contractor is responsible for verifying that the mast arm attachment height (H1) will provide the "Design Height" clearance from the roadway before submitting final shop drawings for approval. Verify elevation data below which was obtained by field measurement or from available project survey data.

Elevation Data for Mast Arm Attachment (H1)

Elevation Differences for:	Pole 13	Pole 14
Baseline reference point at ℄ Foundation @ ground level ⊕	448.25 ft.	448.52 ft.
Elevation difference at High point of roadway surface	+2.01 ft.	-0.87 ft.
Elevation difference at Edge of travelway or face of curb	+/-0.0 ft.	+/-0.0 ft.

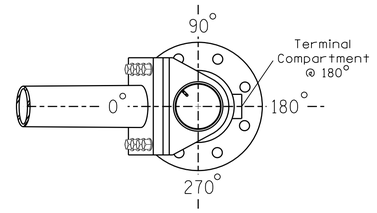

POLE RADIAL ORIENTATION

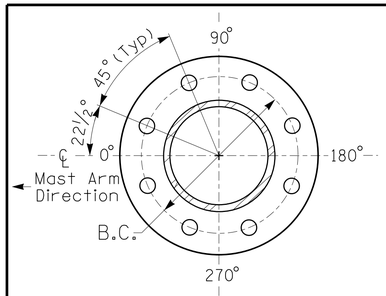

8 BOLT BASE PLATE DETAIL

See Note 6

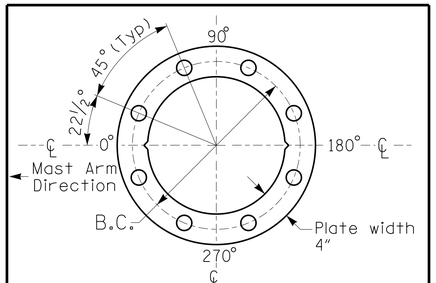

BASE PLATE TEMPLATE & ANCHOR BOLT LOCK PLATE DETAIL

For 8 Bolt Base Plate

MAST ARM LOADING SCHEDULE

LOADING SYMBOL	DESCRIPTION	AREA	SIZE	WEIGHT
	RIGID MOUNTED SIGNAL HEAD 12″-5 SECTION-WITH BACKPLATE	16.3 S.F.	42.0″W X 56.0″L	103 LBS
	RIGID MOUNTED SIGNAL HEAD 12″-4 SECTION-WITH BACKPLATE	11.5 S.F.	25.5″W X 66.0″L	74 LBS
	RIGID MOUNTED SIGNAL HEAD 12″-3 SECTION-WITH BACKPLATE	9.3 S.F.	25.5″W X 52.5″L	60 LBS
Street Name	STREET NAME SIGN RIGID MOUNTED	16.0 S.F.	24.0″W X 96.0″L	36 LBS
	PEDESTRIAN SIGNAL HEAD WITH MOUNTING HARDWARE	2.2 S.F.	18.5″W X 17.0″L	21 LBS
2	SIGN RIGID MOUNTED	7.5 S.F.	30.0″W X 36.0″L	14 LBS

NOTES

DESIGN REFERENCE MATERIAL

1. Design the traffic signal structure and foundation in accordance with:
   - The 6th Edition 2013 AASHTO "Standard Specifications for Structural Supports for Highway Signs, Luminaires, and Traffic Signals, including all of the latest interim revisions.
   - The 2018 NCDOT "Standard Specifications for Roads and Structures." The latest addenda to the specifications can be found in the traffic signal project special provisions.
   - The 2018 NCDOT Roadway Standard Drawings.
   - The traffic signal project plans and special provisions.
   - The NCDOT "Metal Pole Standards" located at the following NCDOT website: https://connect.ncdot.gov/resources/safety/Pages/ITS-Design-Resources.aspx

DESIGN REQUIREMENTS

2. Design the traffic signal structure using the loading conditions shown in the elevation views. These are anticipated worst case "design loads" and may not represent the actual loads that will be applied at the time of the installation. The contractor should refer to the traffic signal plans for the actual loads that will be applied at the time of the installation.
3. Design all signal supports using stress ratios that do not exceed 0.9.
4. The camber design for the mast arm deflection should provide an appearance of a low pitched arch where the tip or the free end of the mast arm does not deflect below horizontal when fully loaded.
5. A clamp-type bolted mast arm-to-pole connection may be used instead of the welded ring stiffened box connection shown as long as the connection meets all of the design requirements.
6. Design base plate with 8 anchor bolt holes. Provide 2 inch x 60 inch anchor bolts.
7. The mast arm attachment height (H1) shown is based on the following design assumptions:
   a. Mast arm slope and deflection are not considered in determining the arm attachment height as they are assumed to offset each other.
   b. Signal heads are rigidly mounted and vertically centered on the mast arm.
   c. The roadway clearance height for design is as shown in the elevation views.
   d. The top of the pole base plate is 0.75 feet above the ground elevation.
   e. Refer to the Elevation Data Chart for the elevation differences between the proposed foundation ground level and the high point of the roadway.
8. The pole manufacturer will determine the total height (H2) of each pole using the greater of the following:
   - Mast arm attachment height (H1) plus 2 feet, or
   - H1 plus 1/2 of the total height of the mast arm attachment assembly plus 1 foot.
9. If pole location adjustments are required, the contractor must gain approval from the Engineer as this may affect the mast arm lengths and arm attachment heights. The contractor may contact the Signal Design Section Senior Structural Engineer for assistance at (919) 814-5000.
10. The contractor is responsible for verifying that the mast arm length shown will allow proper positioning of the signal heads over the roadway.
11. The contractor is responsible for providing soil penetration testing data (SPT) to the pole manufacturer so site specific foundations can be designed.

NCDOT Wind Zone 4 (90 mph)

DOCUMENT NOT CONSIDERED FINAL UNLESS ALL SIGNATURES COMPLETED

Prepared in the Offices of:
Transportation Mobility and Safety Division
NORTH CAROLINA DEPARTMENT OF TRANSPORTATION
Signal Design Section
750 N.Greenfield Pkwy.Garner,NC 27529

NC 42 (Broadway Road) at SR 1529 (Cox Mill Road)

Division 8 Lee County Sanford

PLAN DATE: March 2022 REVIEWED BY:

PREPARED BY: J.A. Lohr REVIEWED BY:

SCALE 0 N/A N/A

REVISIONS	INIT.	DATE

SEAL
NORTH CAROLINA PROFESSIONAL SEAL 026486 ENGINEER ROBERT J. ZIEMBA

DocuSigned by: 04/29/2022
SIGNATURE DATE

SIG. INVENTORY NO. 08-0649

29-APR-2022 11:49
M:\08-49-2202\dgn\3&4\3&4m4.dgn
rziemba

METAL POLE No. 15 and 16

PROJECT REFERENCE NO.	SHEET NO.
R-3830	SIG 22.6

Design Loading for METAL POLE NO. 15

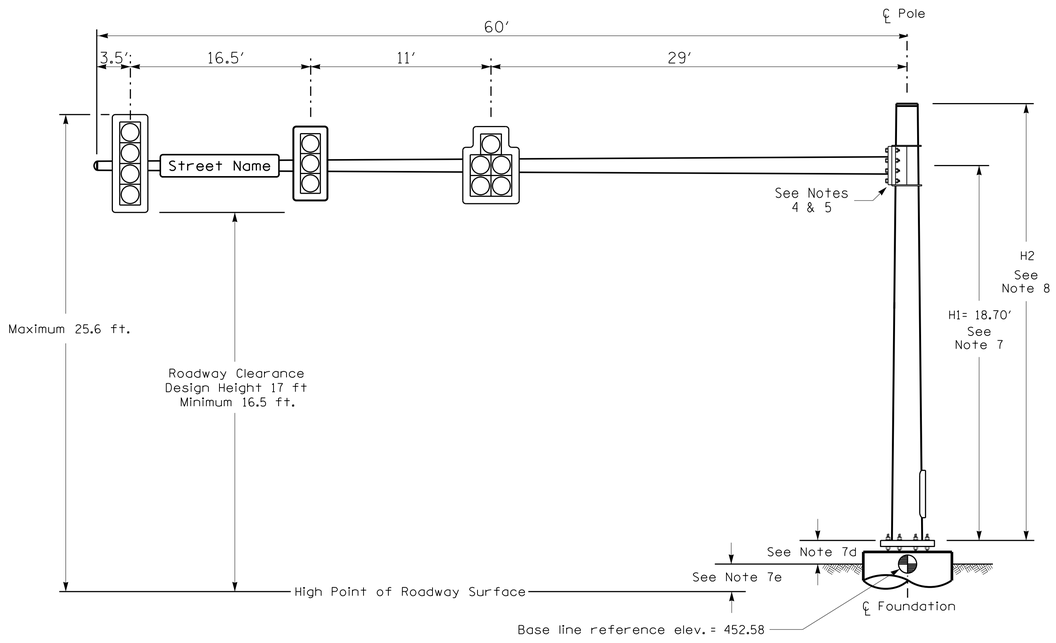

Elevation View

SPECIAL NOTE

The contractor is responsible for verifying that the mast arm attachment height (H1) will provide the "Design Height" clearance from the roadway before submitting final shop drawings for approval. Verify elevation data below which was obtained by field measurement or from available project survey data.

Elevation Data for Mast Arm Attachment (H1)

Elevation Differences for:	Pole 15	Pole 16
Baseline reference point at ⊕ Foundation @ ground level	452.58 ft.	449.94 ft.
Elevation difference at High point of roadway surface	-0.39 ft.	+1.88 ft.
Elevation difference at Edge of travelway or face of curb	+/-0.0 ft.	+/-0.0 ft.

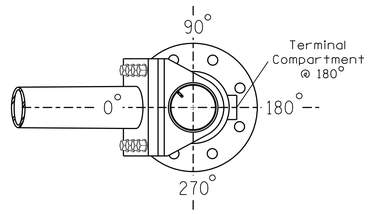

POLE RADIAL ORIENTATION

MAST ARM LOADING SCHEDULE

LOADING SYMBOL	DESCRIPTION	AREA	SIZE	WEIGHT
	RIGID MOUNTED SIGNAL HEAD 12"-4 SECTION-WITH BACKPLATE	11.5 S.F.	25.5" W X 66.0" L	74 LBS
	RIGID MOUNTED SIGNAL HEAD 12"-3 SECTION-WITH BACKPLATE	9.3 S.F.	25.5" W X 52.5" L	60 LBS
	RIGID MOUNTED SIGNAL HEAD 12"-5 SECTION-WITH BACKPLATE	16.3 S.F.	42.0" W X 56.0" L	103 LBS
Street Name	STREET NAME SIGN RIGID MOUNTED	16.0 S.F.	24.0" W X 96.0" L	36 LBS

NOTES

DESIGN REFERENCE MATERIAL

1. Design the traffic signal structure and foundation in accordance with:
   - The 6th Edition 2013 AASHTO "Standard Specifications for Structural Supports for Highway Signs, Luminaires, and Traffic Signals, including all of the latest interim revisions.
   - The 2018 NCDOT "Standard Specifications for Roads and Structures." The latest addenda to the specifications can be found in the traffic signal project special provisions.
   - The 2018 NCDOT Roadway Standard Drawings.
   - The traffic signal project plans and special provisions.
   - The NCDOT "Metal Pole Standards" located at the following NCDOT website: https://connect.ncdot.gov/resources/safety/Pages/ITS-Design-Resources.aspx

DESIGN REQUIREMENTS

2. Design the traffic signal structure using the loading conditions shown in the elevation views. These are anticipated worst case "design loads" and may not represent the actual loads that will be applied at the time of the installation. The contractor should refer to the traffic signal plans for the actual loads that will be applied at the time of the installation.
3. Design all signal supports using stress ratios that do not exceed 0.9.
4. The camber design for the mast arm deflection should provide an appearance of a low pitched arch where the tip or the free end of the mast arm does not deflect below horizontal when fully loaded.
5. A clamp-type bolted mast arm-to-pole connection may be used instead of the welded ring stiffened box connection shown as long as the connection meets all of the design requirements.
6. Design base plate with 8 anchor bolt holes. Provide 2 inch x 60 inch anchor bolts.
7. The mast arm attachment height (H1) shown is based on the following design assumptions:
   a. Mast arm slope and deflection are not considered in determining the arm attachment height as they are assumed to offset each other.
   b. Signal heads are rigidly mounted and vertically centered on the mast arm.
   c. The roadway clearance height for design is as shown in the elevation views.
   d. The top of the pole base plate is 0.75 feet above the ground elevation.
   e. Refer to the Elevation Data Chart for the elevation differences between the proposed foundation ground level and the high point of the roadway.
8. The pole manufacturer will determine the total height (H2) of each pole using the greater of the following:
   - Mast arm attachment height (H1) plus 2 feet, or
   - H1 plus 1/2 of the total height of the mast arm attachment assembly plus 1 foot.
9. If pole location adjustments are required, the contractor must gain approval from the Engineer as this may affect the mast arm lengths and arm attachment heights. The contractor may contact the Signal Design Section Senior Structural Engineer for assistance at (919) 814-5000.
10. The contractor is responsible for verifying that the mast arm length shown will allow proper positioning of the signal heads over the roadway.
11. The contractor is responsible for providing soil penetration testing data (SPT) to the pole manufacturer so site specific foundations can be designed.

Design Loading for METAL POLE NO. 16

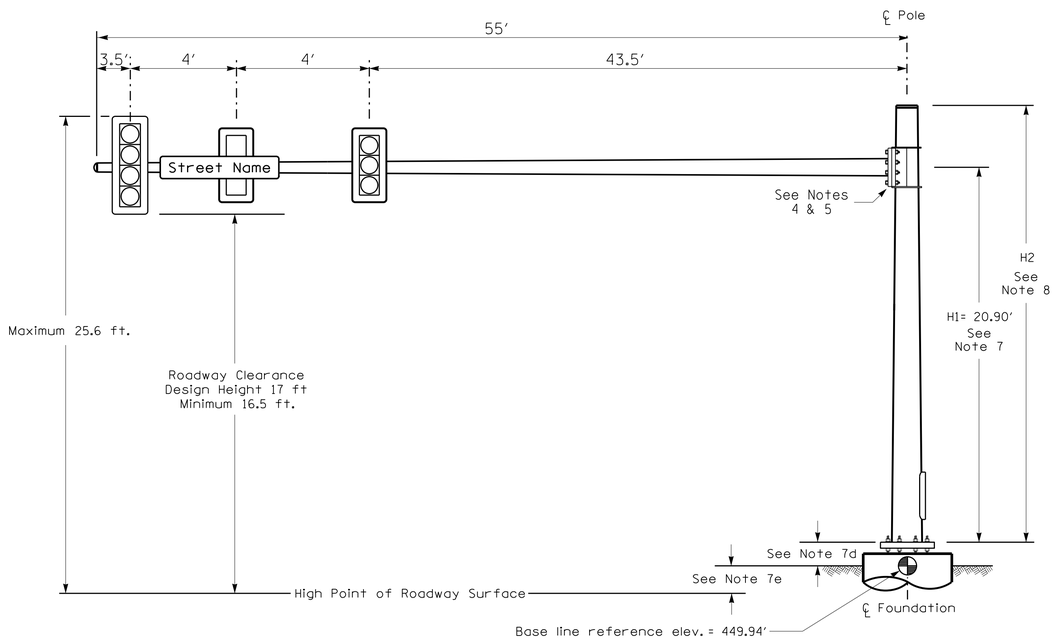

Elevation View

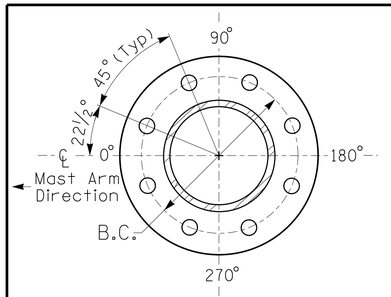

8 BOLT BASE PLATE DETAIL

See Note 6

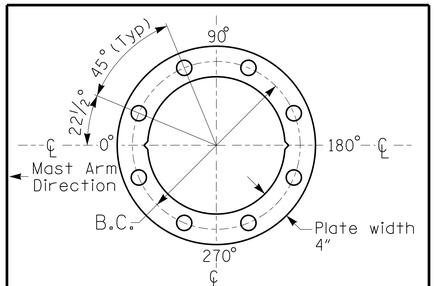

BASE PLATE TEMPLATE & ANCHOR BOLT LOCK PLATE DETAIL

For 8 Bolt Base Plate

NCDOT Wind Zone 4 (90 mph)

DOCUMENT NOT CONSIDERED FINAL UNLESS ALL SIGNATURES COMPLETED

Prepared in the Offices of:
Transportation Mobility and Safety Division
Signal Design Section
750 N.Greenfield Pkwy.Garner,NC 27529

NC 42 (Broadway Road) at SR 1529 (Cox Mill Road)

Division 8 | Lee County | Sanford

PLAN DATE: March 2022 | REVIEWED BY:

PREPARED BY: J.A. Lohr | REVIEWED BY:

SCALE: 0 N/A N/A

REVISIONS	INIT.	DATE

SEAL

NORTH CAROLINA PROFESSIONAL SEAL 026486 ENGINEER ROBERT J. ZIEMBA

DocuSigned by: 04/29/2022

SIGNATURE DATE

SIG. INVENTORY NO. 08-0649

29-APR-2022 11:42
\\NCDOT\Workgroups-TEC\TSAS\ITS Signals\Signal Design Section\Central Region\Div 8\R-3830\2022 revisions\080649-20220429m15am16.dgn
rziemba

DocuSign Envelope ID: 7C5AD177-4B9B-45BB-B7A4-06E582EB60F8

PROJECT I.D. NO.	SHEET NO.
R-3830	Sig.M1

STATE OF NORTH CAROLINA
DIVISION OF HIGHWAYS

STANDARD DRAWINGS FOR ALL METAL POLES

POLE STANDARDS

NCDOT METAL P

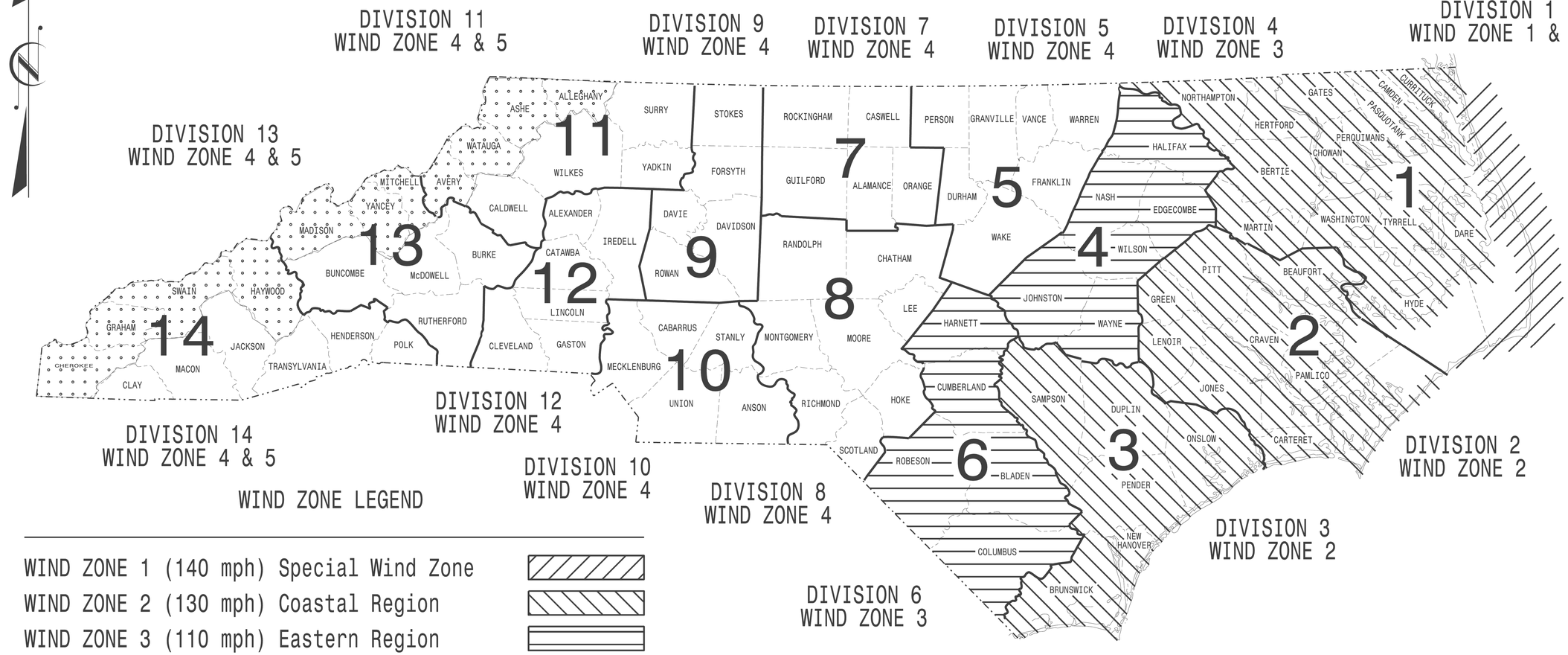

WIND ZONE LEGEND

WIND ZONE 1 (140 mph) Special Wind Zone	
WIND ZONE 2 (130 mph) Coastal Region	
WIND ZONE 3 (110 mph) Eastern Region	
WIND ZONE 4 (90 mph) Central & Mtn. Region	
WIND ZONE 5 (120 mph) Special Wind Zone	

https://connect.ncdot.gov/resources/safety/Pages/ITS-Design-Resources.aspx

Prepared In the Offices of:

Transportation Mobility and Safety Division
Signal Design Section
STATE OF NORTH CAROLINA DEPARTMENT OF TRANSPORTATION

750 N.Greenfield Pkwy.
Garner,NC 27529

Designed in conformance with the latest 2015 Interim to the 6th Edition 2013

AASHTO

Standard Specifications for Structural Supports for Highway Signs, Luminaires, and Traffic Signals

INDEX OF PLANS

DRAWING NUMBER	DESCRIPTION
Sig. M 1	Statewide Wind Zone Map
Sig. M 2	Typical Fabrication Details–All Metal Poles
Sig. M 3	Typical Fabrication Details–Strain Poles
Sig. M 4	Typical Fabrication Details–Mast Arm Poles
Sig. M 5	Typical Fabrication Details–Mast Arm Connection
Sig. M 6	Typical Fabrication Details–Strain Pole Attachments
Sig. M 7	Construction Details–Foundations
Sig. M 8	Standard Strain Pole Foundation–All Soil Conditions

NCDOT CONTACTS:

MOBILITY AND SAFETY DIVISION – ITS AND SIGNALS UNIT

M.M. MCDIARMID, P.E. – STATE ITS AND SIGNALS ENGINEER

J. P. GALLOWAY, P.E. – STATE SIGNALS ENGINEER

D.C. SARKAR, P.E. – ITS AND SIGNALS SENIOR STRUCTURAL ENGINEER

SEAL

NORTH CAROLINA PROFESSIONAL SEAL 028094 ENGINEER DEBESH C. SARKAR

DocuSigned by: Debesh C. Sarkar 44E8B3...
SIGNATURE

10/11/2017
DATE

DocuSign Envelope ID: 7C5AD177-4B9B-45BB-B7A4-06E582EB60F8

PROJECT ID. NO.	SHEET NO.
R-3830	Sig.M2

Fabrication Details – All Metal Poles

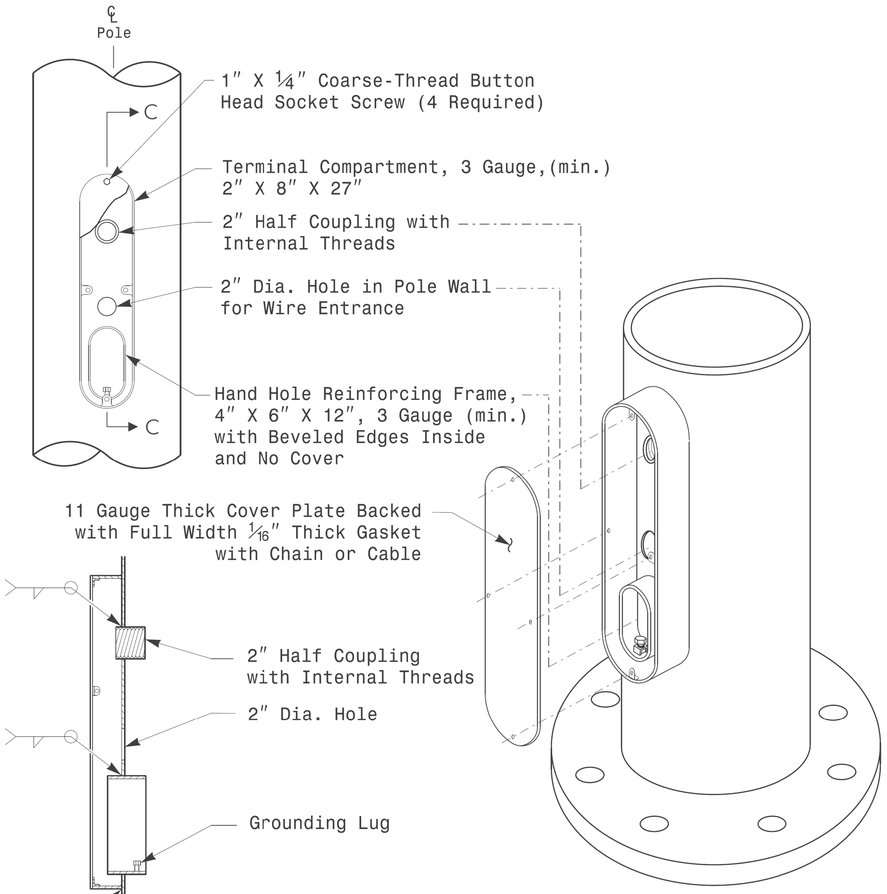

Section C-C

Note: Unless otherwise specified, locate Terminal Compartment 1 foot above the pole base plate at 180 degrees on the pole's radial index.

Terminal Compartment Detail

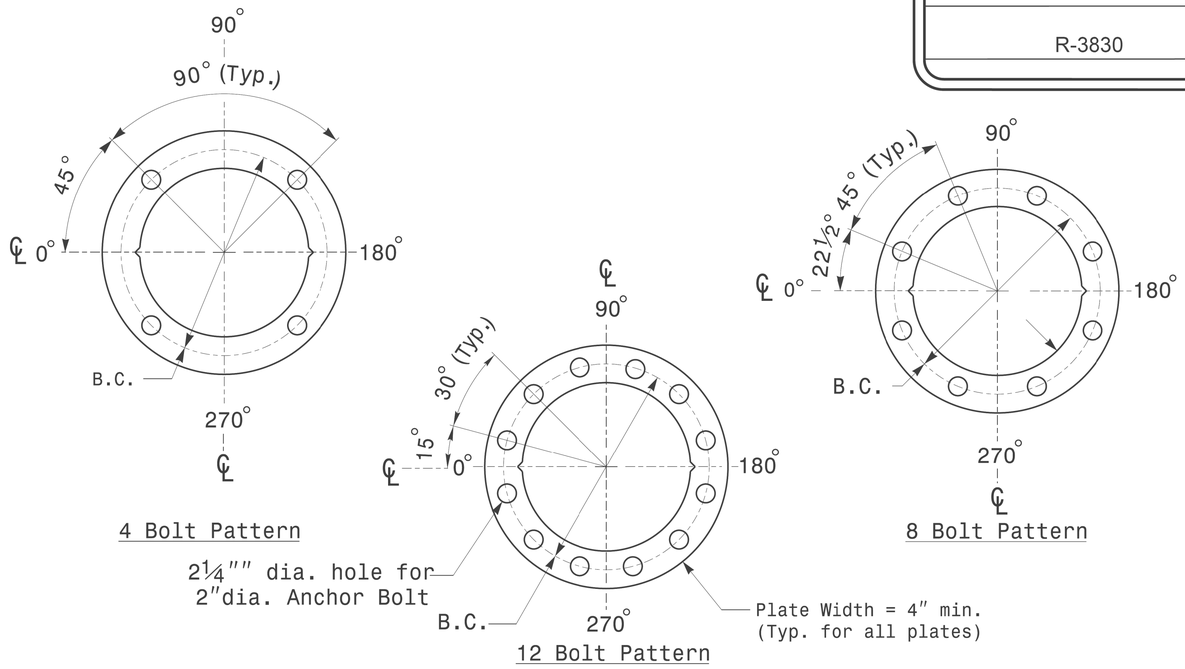

Construct Templates and Plates from ¼" min. thick Steel. Galvanizing is not required.

Base Plate Template and Anchor Bolt Lock Plate Details

MFG _____ MFG. DATE: MM/YY
SHAFT D/T/L/Y ----/----/----/----
ARM-A D/T/L/Y ----/----/----/----
----/----/----/----
ARM-B D/T/L/Y ----/----/----/----
----/----/----/----
A.B. DIA./B.C./L/Y ----/----/----/----
NCDOT SIG. INV. NO. _____
NCDOT POLE NO. _____

Shaft I.D. Tag
(Provide on Shaft of Strain Poles and Mast Arm Poles Shaft)

MFG _____ MFG. DATE: MM/YY
SECTION D/T/L/Y ----/----/----/----
NCDOT SIG. INV. NO. _____
NCDOT POLE NO. _____

Arm I.D. Tag
(Provide on each section of a multi-section mast arm.)

Notes:
1) D= Diameter, T= Thickness, L= Length, Y= Yield Strength
2) A.B. = Anchor Bolt
3) B.C. = Bolt Circle of Anchor Bolts
4) If Custom Design, use "NCDOT STANDARD" line for Signal Inv. Number and pole I.D. number
5) See drawing M3 and M4 for mounting positions of I.D. tags.

Identification Tag Details

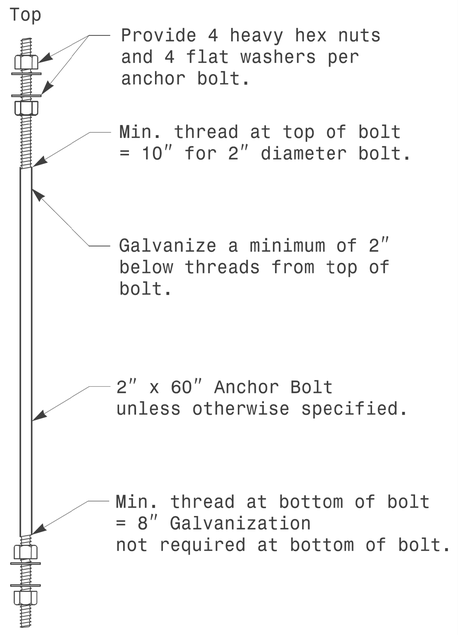

Anchor Bolt Detail

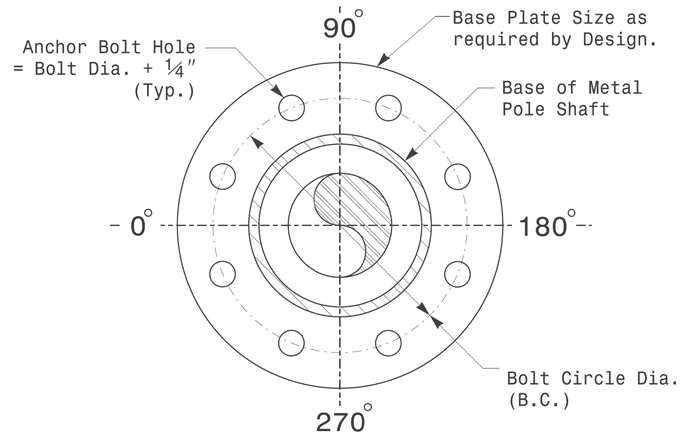

Note: Base plate may be circular,octagonal,square or rectangular in shape.

Typical Base Plate Detail

Prepared In the Offices of:
Transportation Mobility and Safety Division
Signal Design Section
750 N.Greenfield Pkwy,Garner,NC 27529

SCALE
0 NA
NONE

Typical Fabrication Details For All Metal Poles

PLAN DATE:	OCTOBER 2017	DESIGNED BY:	C.F.ANDREWS
PREPARED BY:	N. BITTING	REVIEWED BY:	D.C. SARKAR

REVISIONS	INIT.	DATE

SEAL
NORTH CAROLINA PROFESSIONAL SEAL 028094 ENGINEER DEBESH C. SARKAR

DocuSigned by:
Debesh C. Sarkar
44E8E32E...
SIGNATURE

10/11/2017
DATE

11-OCT-2017 08:30
S:\ITS&SU\ITS Signals\Signal Design Section\Eastern Region\M Sheets\2016\2014 Sig.M2 Std. Fabrication Details-All Poles..dgn
rnzinser

DocuSign Envelope ID: 7C5AD177-4B9B-45BB-B7A4-06E582EB60F8

PROJECT ID. NO.	SHEET NO.
R-3830	Sig.M3

Fabrication Details – Strain Poles

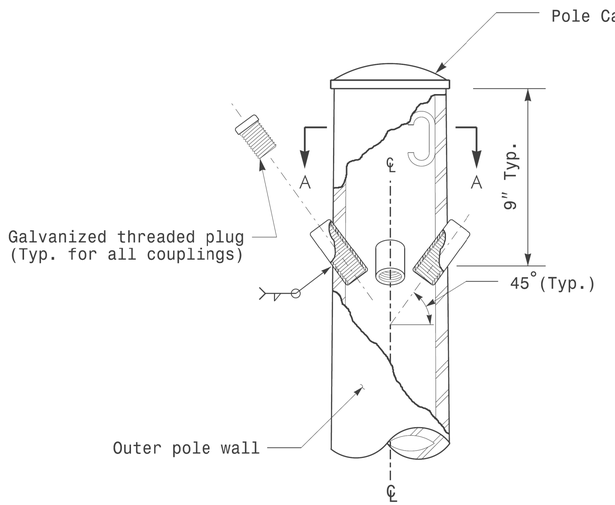

Cable Entrances at Top of Pole

Note:
1. Opening in pole base plate shall be equal to pole base inside diameter minus 3½" but shall not be less than 8½".

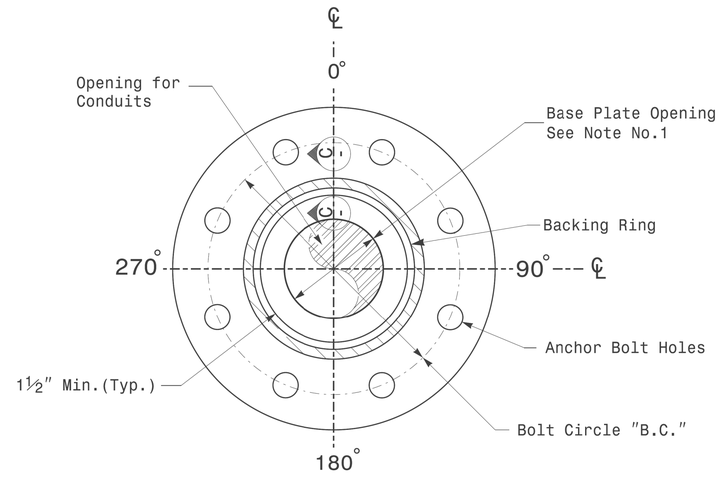

Section B-B

Pole Base Plate Details
(8 and 12 Bolt Pattern)

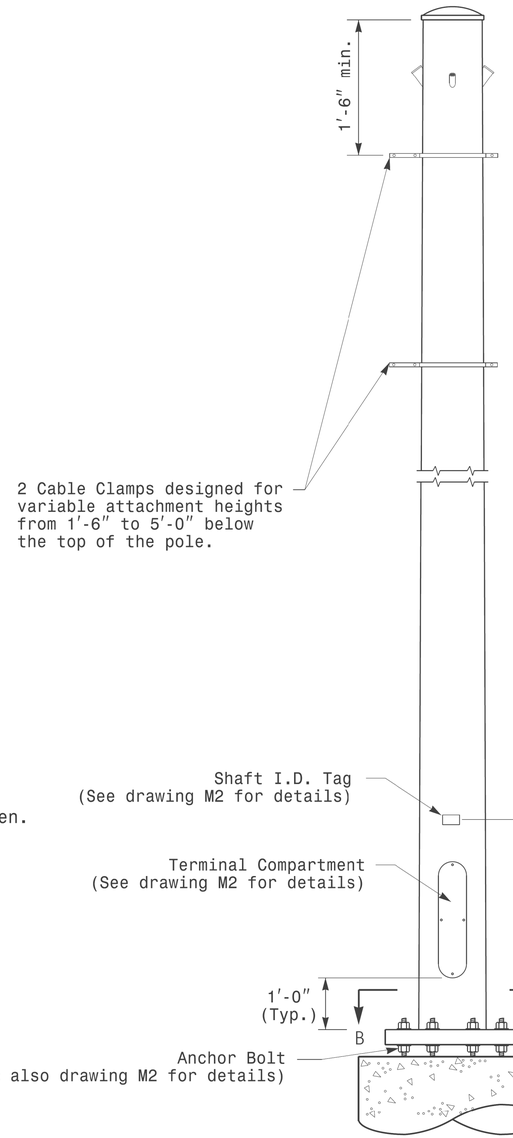

Monotube Strain Pole

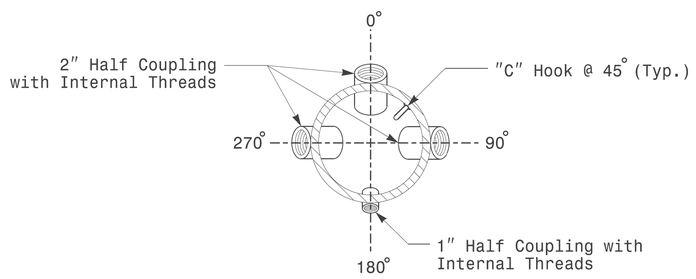

Section A-A

Radial Orientation for Factory Installed
Accessories at Top of Pole

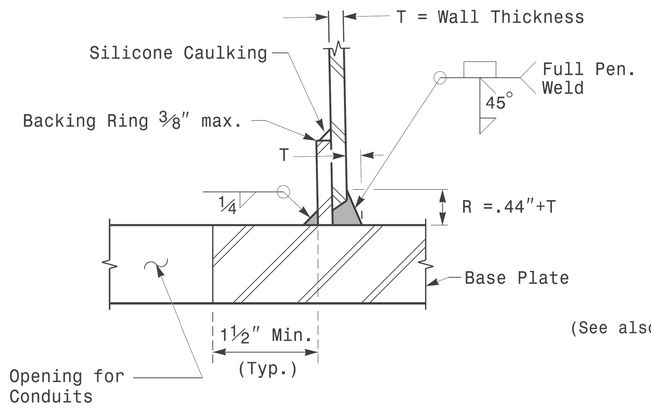

Section C-C
(Pole Attachment to Base Plate)

Full-Penetration
Groove Weld Detail

Prepared in the Offices of:
Transportation Mobility and Safety Division
Traffic Engineering Branch
Signal Design Section
750 N.Greenfield Pkwy.Garner,NC 27529

Typical Fabrication Details
For
Strain Poles

PLAN DATE:	OCTOBER 2017	DESIGNED BY:	K.C.DURIGON
PREPARED BY:	N. BITTING	REVIEWED BY:	D.C. SARKAR

REVISIONS	INIT.	DATE

SCALE
0 NA
NONE

SEAL
NORTH CAROLINA PROFESSIONAL SEAL 028094 ENGINEER DEBESH C. SARKAR

DocuSigned by:
Debesh C. Sarkar
4AE3E3C3A3A3A3A...
SIGNATURE

10/11/2017
DATE

11-OCT-2017 08:25
S:*IT&SU\ITS Signals\Signal Design Section\Eastern Region\MU Sheets*2016*2014 Sig.MU Std. Fabrication Details\Strain Poles.dgn
rezlinear

DocuSign Envelope ID: 7C5AD177-4B9B-45BB-B7A4-06E582EB60F8

PROJECT ID. NO.	SHEET NO.
R-3830	Sig.M4

Fabrication Details – Mast Arm Poles

Note:
1. Opening in pole base plate shall be equal to pole base inside diameter minus 3½" but shall not be less than 8½".

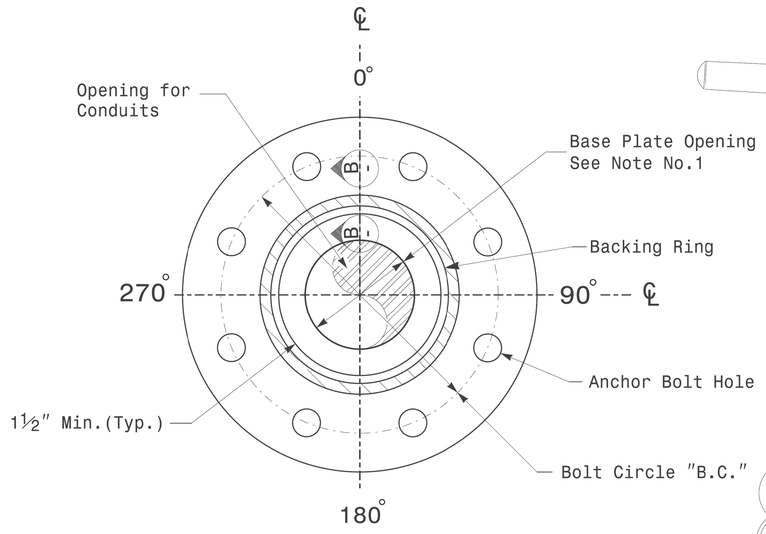

Section A-A

Pole Base Plate Details

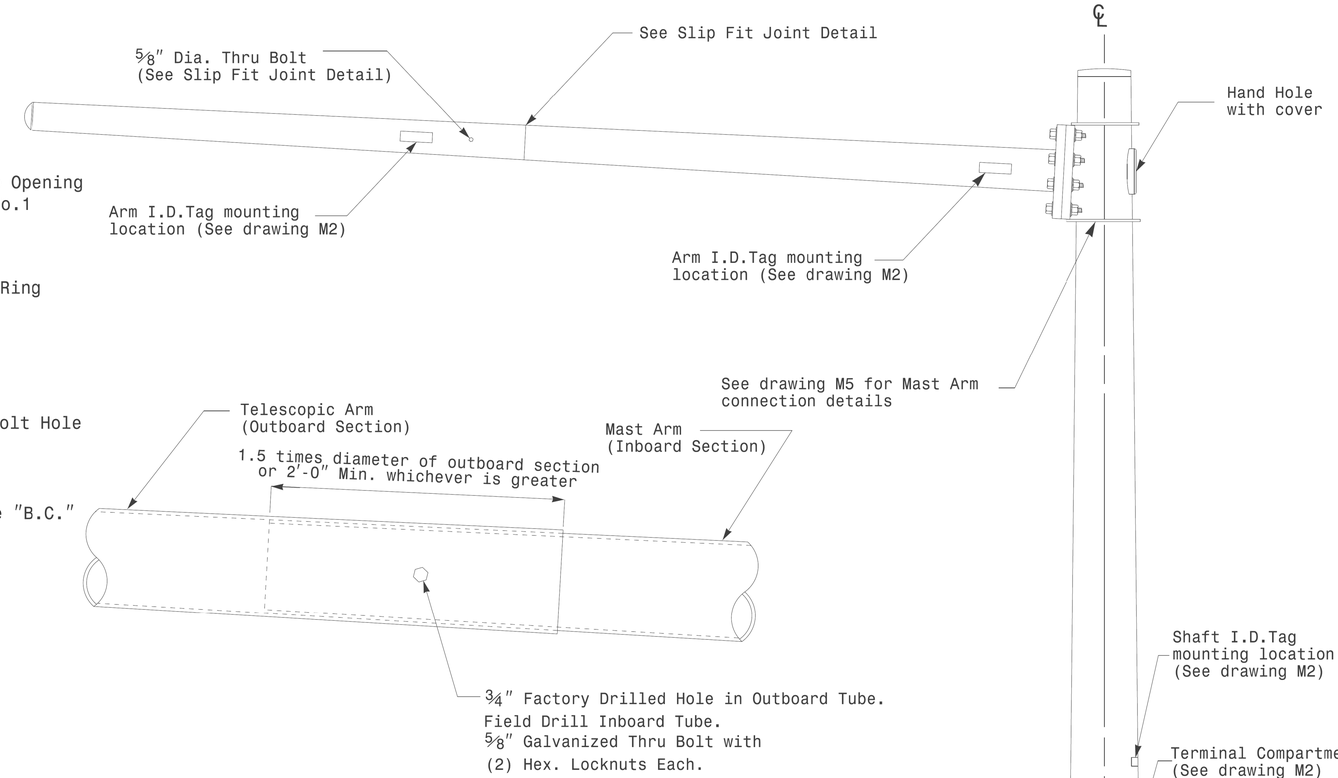

Slip Fit Joint Detail for Mast Arm

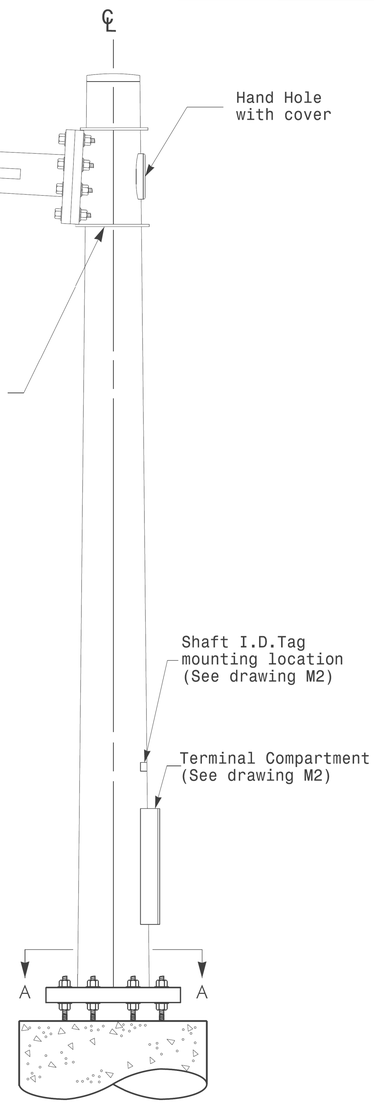

Mast Arm Pole

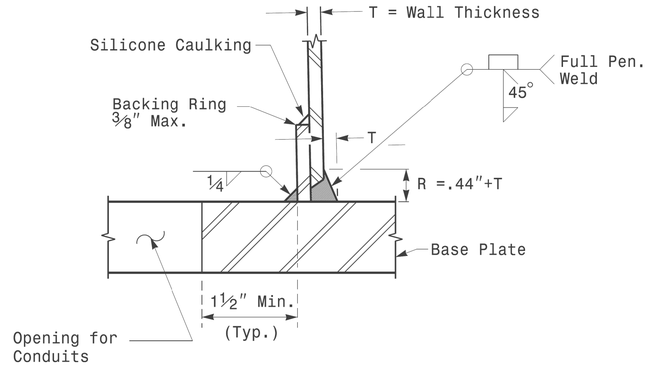

Section B-B

(Pole Attachment to Base Plate)

Full-Penetration Groove Weld Detail

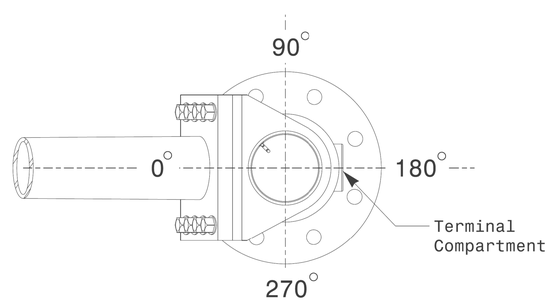

Mast Arm Radial Orientation

Prepared in the Offices of:
Transportation Mobility and Safety Division
Signal Design Section
750 N.Greenfield Pkwy.Garner,NC 27529

SCALE
0 NA
NONE

Typical Fabrication Details For Mast Arm Poles

PLAN DATE:	OCTOBER 2017	DESIGNED BY:	K.C.DURIGON
PREPARED BY:	N. BITTING	REVIEWED BY:	D.C. SARKAR

REVISIONS	INIT.	DATE

SEAL
NORTH CAROLINA PROFESSIONAL SEAL 028094 ENGINEER DEBESH C. SARKAR

DocuSigned by: Debesh C. Sarkar
SIGNATURE
10/11/2017
DATE

11-OCT-2017 08:33
S:\ITS&SU\ITS Signals\Signal Design Section\Eastern Region\M Sheets\2016\2014 Sig.M4 Std. Fabrication Details-Mast Arm Poles.dgn
rnzinser

DocuSign Envelope ID: 7C5AD177-4B9B-45BB-B7A4-06E582EB60F8

Welded Ring Stiffened Mast Arm Connection

PROJECT ID. NO.	SHEET NO.
R-3830	Sig.M5

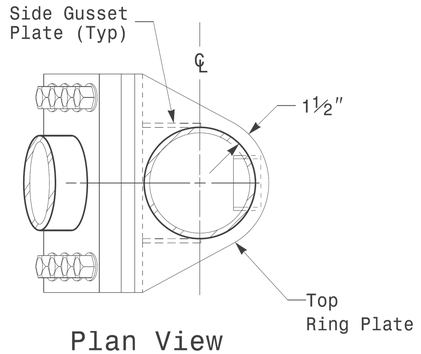

Plan View

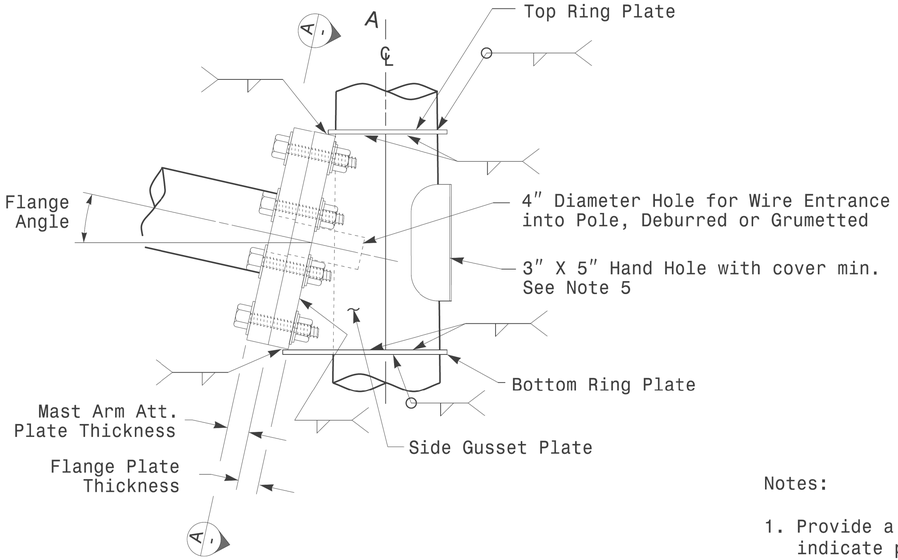

Side Elevation View

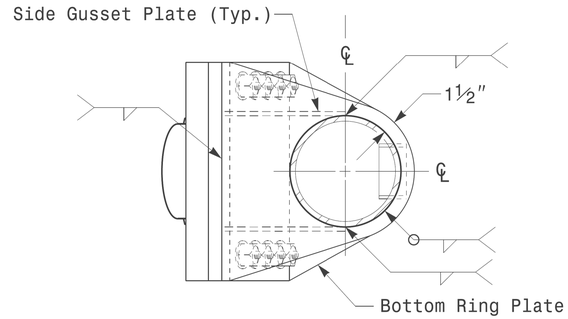

Bottom View

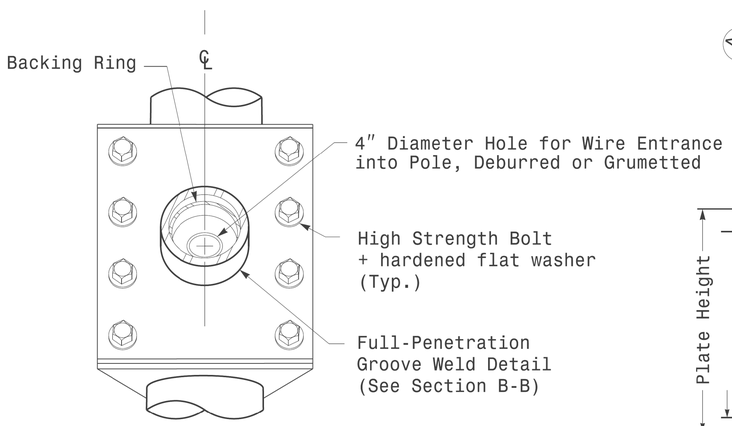

Front Elevation View

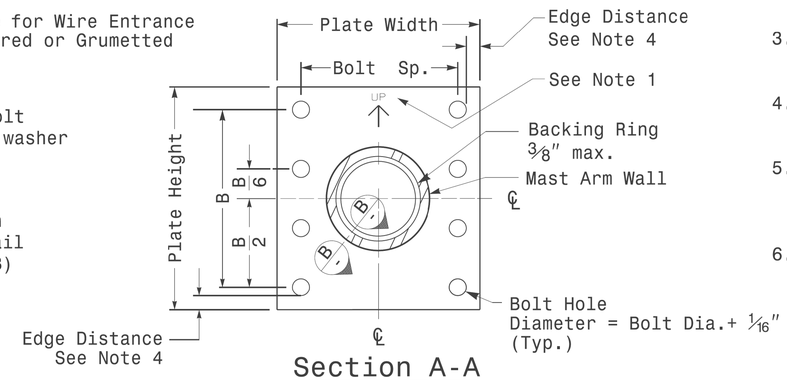

Section A-A
Mast Arm Attachment Plate

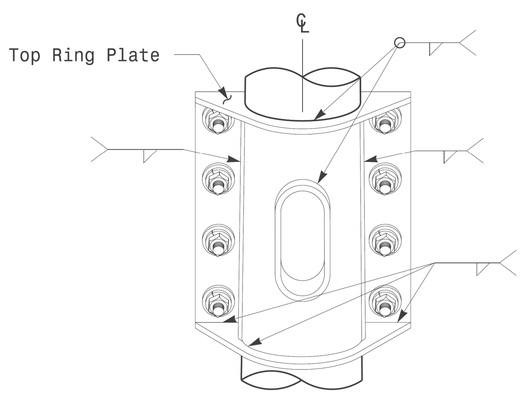

Back Elevation View

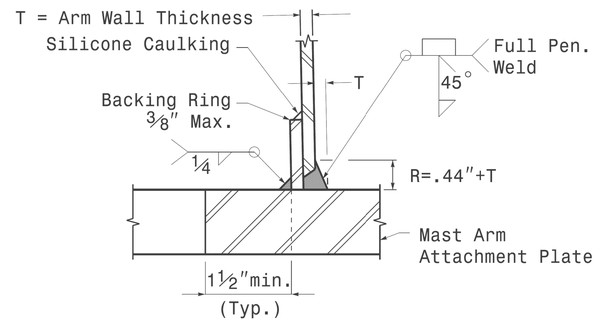

Section B-B
Full-Penetration Groove Weld Detail

Notes:

1. Provide a permanent means of identification above the mast arm to indicate proper attachment orientation of the mast arm.
2. Designer will determine the size of all structural components, plates, fasteners, and welds shown unless they are already specified.
3. Fabricator is responsible for providing appropriate holes at drainage points to drain galvanizing materials.
4. For minimum edge distance follow AISC Table J3.4 and J3.5. For nominal bolt hole size use Table J3.3.
5. Provide upper handhole as necessary when shaft extensions are reguired for luminaire arms or camera. For poles without luminaires/camera, wiring can be done through the top of pole.
6. Allowable range of flange tilt angle will vary from 0° to as required.

Fabrication Details – Mast Arm Connection

Prepared In the Offices of:
Transportation Mobility and Safety Division
Signal Design Section
750 N.Greenfield Pkwy,Garner,NC 27529

Typical Fabrication Details For Mast Arm Connection To Pole

PLAN DATE:	OCTOBER 2017	DESIGNED BY:	C.F.ANDREWS
PREPARED BY:	N. BITTING	REVIEWED BY:	D.C. SARKAR

REVISIONS	INIT.	DATE

SCALE 0 NA NONE

SEAL
NORTH CAROLINA PROFESSIONAL SEAL 028094 ENGINEER DEBESH C. SARKAR

DocuSigned by: Debesh C. Sarkar
SIGNATURE
10/11/2017
DATE

11-OCT-2017 08:35
S:\ITS&SU\ITS Signals\Signal Design Section\Eastern Region\M Sheets\2016\2014 Sig.M5 Std. Connection Fabrication Details-Mast Arm Poles.dgn
rnzinser

DocuSign Envelope ID: 7C5AD177-4B9B-45BB-B7A4-06E582EB60F8

PROJECT ID. NO.	SHEET NO.
R-3830	Sig.M6

Fabrication Details – Strain Pole Attachments

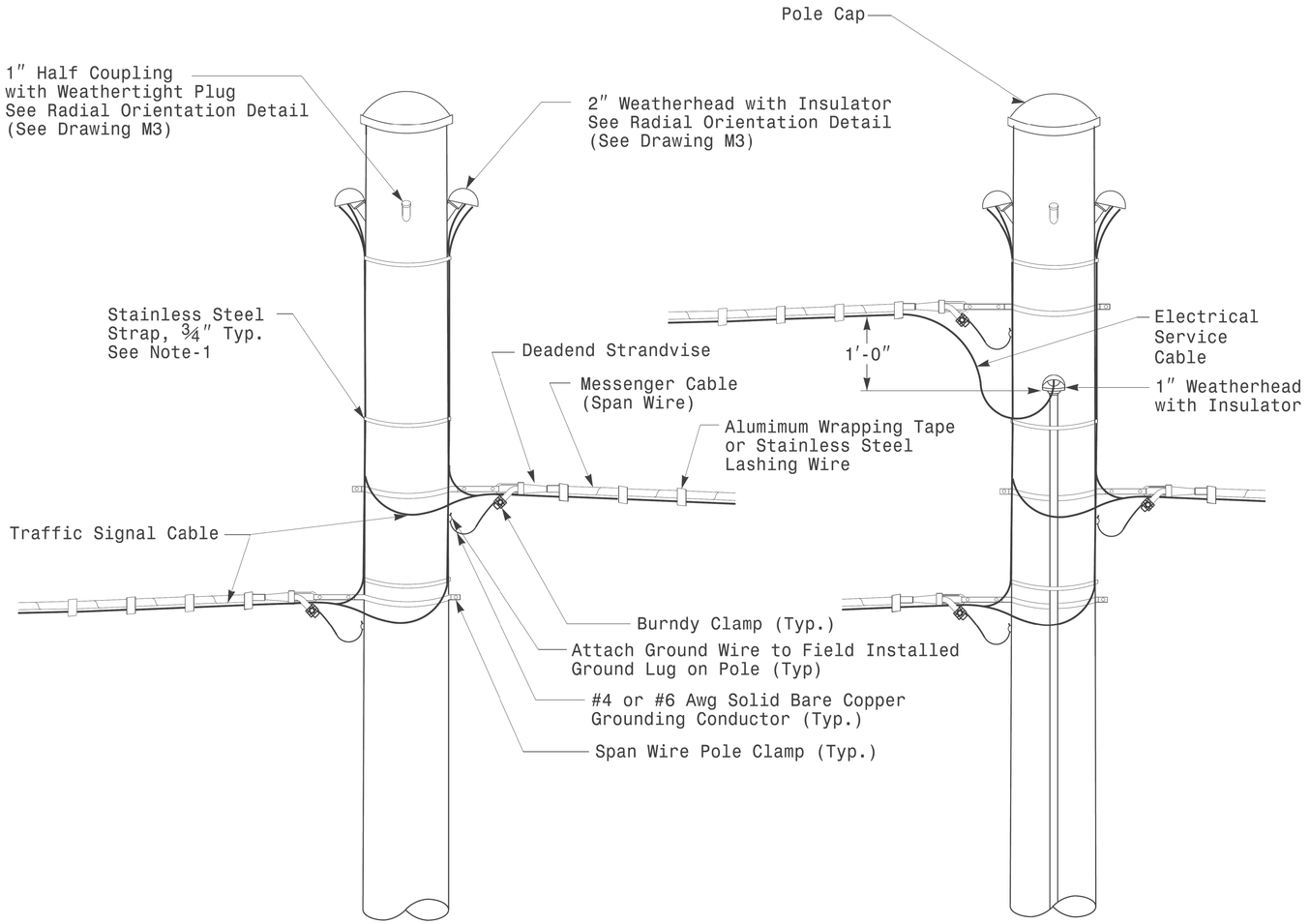

Strain Pole Attachments

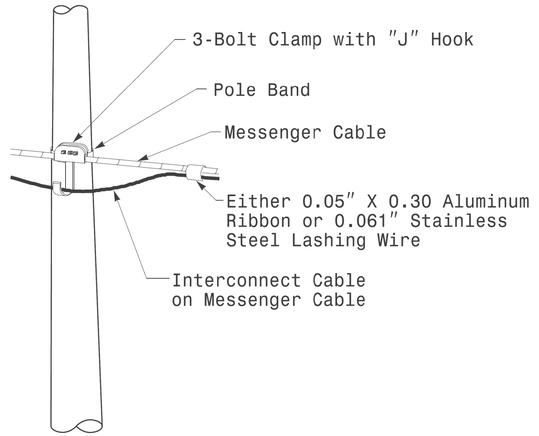

Attachment of Cable to Intermediate Metal Pole

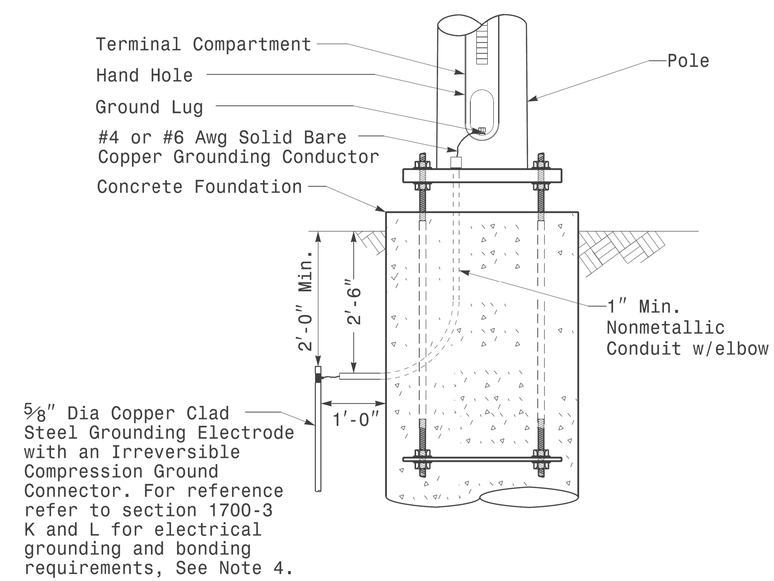

Metal Pole Grounding Detail For Strain Pole and Mast Arm

NOTE:

1. Strap all signal cables to the side of the pole with ¾" stainless steel straps when the distance between the spanwire attachment clamp and the weatherheads exceeds 3'-0".
2. Provide minimum two spanwire pole clamps per pole.
3. It is prohibited to attach two span wires at one pole clamp.
4. For general requirements refer to NCDOT Standard Specifications for Roadway and Structures, January 2018.

Prepared In the Offices of:
Transportation Mobility and Safety Division
Signal Design Section
750 N.Greenfield Pkwy.Garner.NC 27529

SCALE
0 NA
NONE

Typical Fabrication Details For Strain Pole Attachments

PLAN DATE:	OCTOBER 2017	DESIGNED BY:	C.F.ANDREWS
PREPARED BY:	N. BITTING	REVIEWED BY:	D.C. SARKAR

REVISIONS	INIT.	DATE

SEAL
NORTH CAROLINA PROFESSIONAL SEAL 028094 ENGINEER DEBESH C. SARKAR

DocuSigned by: Debesh C. Sarkar
SIGNATURE
10/11/2017
DATE

11-OCT-2017 08:36
S:\ITS&SU\ITS Signals\Signal Design Section\Eastern Region\MW Sheets\2016\2014 Sig.M6 Std. Fabrication Details-Strain Poles.dgn
rnzinser

DocuSign Envelope ID: 7C5AD177-4B9B-45BB-B7A4-06E582EB60F8

PROJECT ID. NO.	SHEET NO.
R-3830	Sig.M7

Construction Details — Foundations

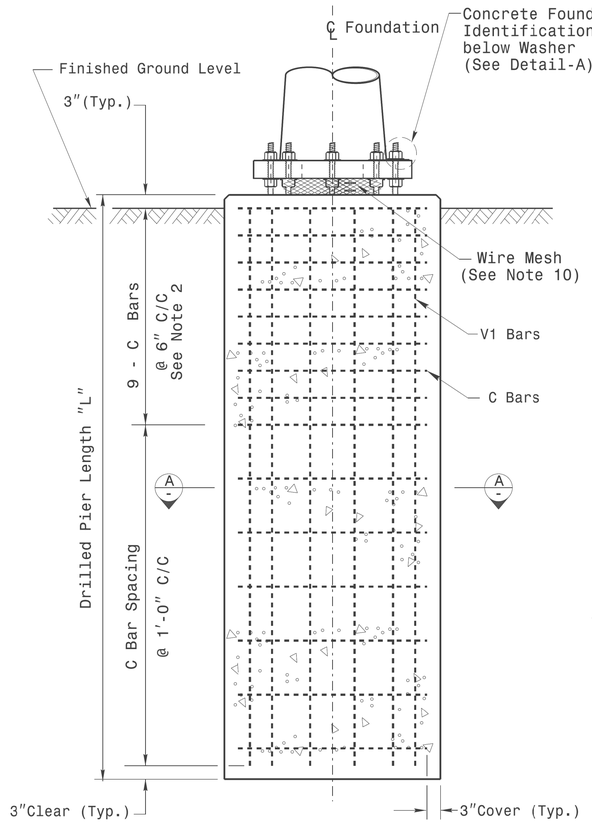

Concrete Shaft Elevation

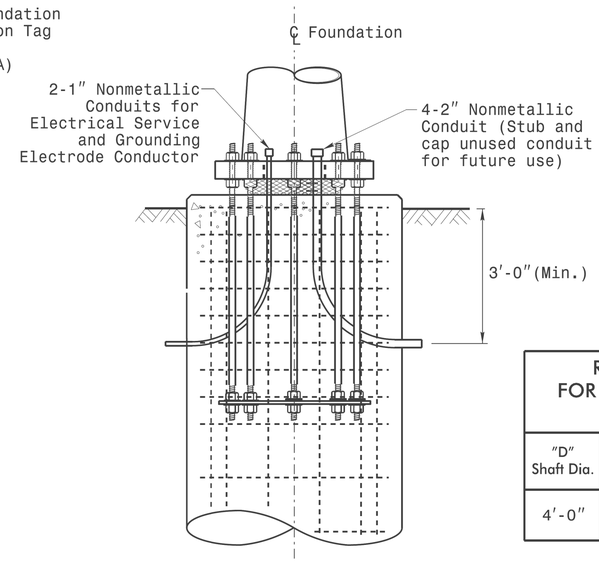

Typical Foundation Conduit Details

REINFORCING STEEL TABLE FOR STANDARD DRILL PIER SHAFT (4′–0″ DIAMETER)						
"D" Shaft Dia.	Conc. Volume (cu. yds.)	Bar Name	MIN.	Size	Type	Length
4′-0″	.465 x L	V1	—	#8	STR.	**
		C	*	#4	CIR.	12′-6″

* See Note No. 2
** See Note No. 3

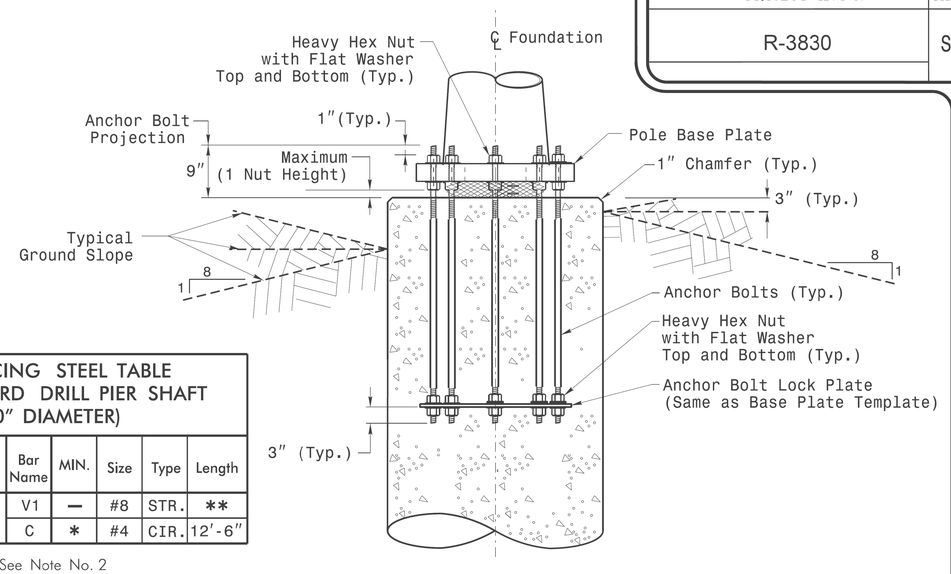

Typical Foundation Anchor Bolt Details

(Reinforcing Cage Not Shown for Clarity)

General Notes:

1. If actual subsurface conditions differ significantly from boring data contact the Engineer before excavating or placing concrete.
2. Circular tie reinforcing rings may be vertically adjusted by +/-3″ at a depth between 2′-0″ and 3′-0″ to facilitate the installation of electrical conduit entering in the cage.
3. For standard foundations, see sheet Sig. M8 for details. Vertical reinforcing bars (V1) may be horizontally adjusted by +/-3″ to facilitate the installation of electrical conduit entering into the cage.
4. Provide 2″ to 5″ foundation projection above ground level depending on the ground slope.
5. Unless otherwise shown, foundation designs are based on non-sloping level ground surfaces with slope ratios of 8:1 (H:V) or flatter. If actual ground line slopes are steeper contact the Engineer before excavating or placing concrete.
6. Construct foundations in accordance with NCDOT Standard Provisions SP09 R005- Foundations and Anchor Rod Assemblies for Metal Poles. All applicable 2018 NCDOT Standard Specifications are referenced in this provision. Refer to the NCDOT Resources/Specifications page located on the Connect NCDOT website.

   https://connect.ncdot.gov/resources/Specifications and Special Provisions.aspx
7. Use air entrained AA concrete mix with a compression strength of f'c=4500 psi.(min.) after 28 days.
8. Use ASTM A615 grade 60 deformed bars for all reinforcing steel. Maintain at least 3″ cover on all reinforcement.
9. Locate the Identification Tag on the top of the base plate, directly above the conduit's entry point.
10. Provide two layers of galvanized welded 23 gauge (0.25) 6″ wide 4 mesh wire around pipes under the base plate and secure it with ties if necessary.
11. Preferred location for the I.D. Tag is as shown in Detail-A; directly above the conduit entering the foundation.

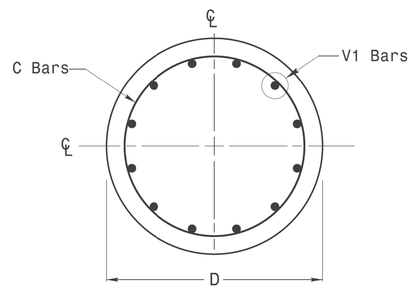

Section A-A

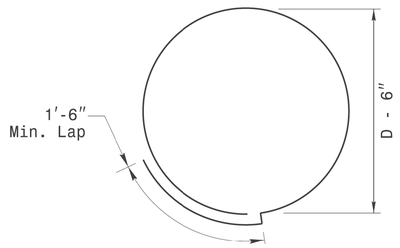

Typical "C" Bar Detail

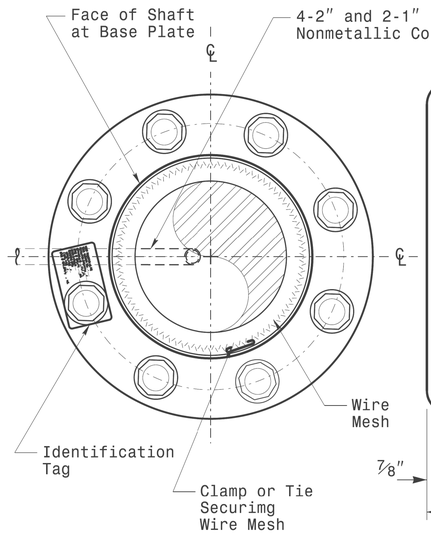

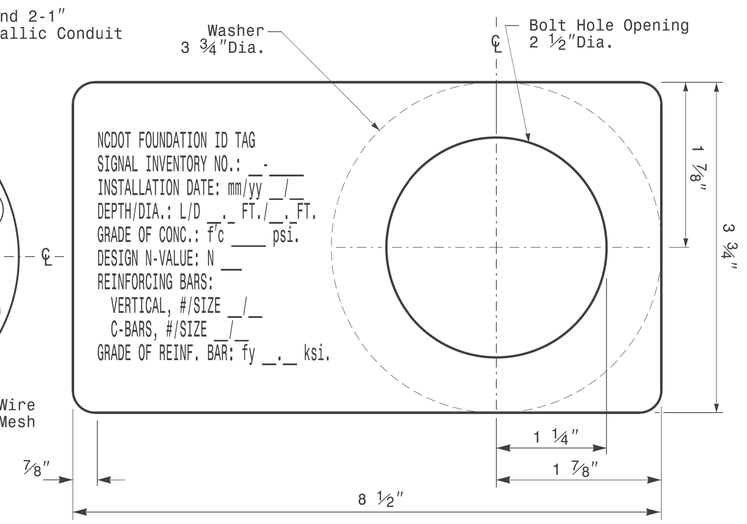

D = Diameter
L = Length/Depth
mm = Month
yy = Year

Detail-A

Concrete Foundation Identification Tag Details

Prepared in the Offices of:
Transportation Mobility and Safety Division
Traffic Engineering Branch
Signal Design Section
750 N.Greenfield Pkwy.Garner,NC 27529

Construction Details For Foundations

PLAN DATE:	OCTOBER 2018	DESIGNED BY:	C.B.COGDELL
PREPARED BY:	N. BITTING	REVIEWED BY:	D.C. SARKAR

SCALE: 0 NA — NONE

REV. NO.	COMMENTS	INIT.	DATE
1	Revised Foundation Tag Details	N.B.	5/11/2015

SEAL
NORTH CAROLINA PROFESSIONAL SEAL 028094 ENGINEER DEBESH C. SARKAR

DocuSigned by: Debesh C. Sarkar 44E8E3E3SIGNATURE
10/11/2017 DATE

11-OCT-2017 08:37
S:\TS&SU\TS Signals\Signal Design Section\Eastern Region\NW Sheets\2016\2014 Sig_M7 Std. Construction Details-Strain Poles.dgn
rnzitser

DocuSign Envelope ID: 7C5AD177-4B9B-45BB-B7A4-06E582EB60F8

SOIL CONDITION

PROJECT ID. NO.	SHEET NO.
R-3830	Sig.M8

		STANDARD STRAIN POLES						STANDARD FOUNDATIONS 48″ Diameter Drilled Pier Length (L) – Feet							Reinforcement			
					Reactions at the Pole Base			Clay				Sand			Longitudinal		Stirrups	
		Case No.	Pole Height (Ft.)	Base Plate BC (In.)	Axial (kip)	Shear (kip)	Moment (ft–kip)	Medium N–Value 4–8	Stiff N–Value 9–15	Very Stiff N–Value 16–30	Hard N–Value >30	Loose N–Value 4–10	Medium N–Value 11–30	Dense N–Value >30	Bar Size (#)	Quantity (ea.)	Bar Size (#)	Spacing (in.)
WIND ZONE 1	LIGHT	S26L3	26	25	2	11	270	19	13	10	8	17	14.5	12.5	8	12	4	12
		S30L3	30	25	2	11	300	19.5	13.5	10	8	17.5	15	13	8	14	4	12
		S35L3	35	25	3	11	320	20	13.5	10.5	8	17.5	15	13	8	14	4	12
	HEAVY	S30H3	30	29	3	16	450	24.5	16	12	9	21	17.5	15	8	16	4	6
		S35H3	35	29	4	16	515	26	17	12.5	9.5	22	18.5	16	8	16	4	6
WIND ZONE 2	LIGHT	S26L2	26	23	2	10	245	18	12.5	9.5	8	16.5	14	12	8	12	4	12
		S30L2	30	23	2	10	270	18.5	12.5	10	8	16.5	14	12.5	8	12	4	12
		S35L2	35	23	3	10	300	19.5	13	10	8	17	14.5	13	8	12	4	12
	HEAVY	S30H2	30	29	3	15	415	23	15.5	11.5	9	20	17	14.5	8	16	4	6
		S35H2	35	29	4	15	475	25	16.5	12	9.5	21	17.5	15.5	8	16	4	6
WIND ZONE 3	LIGHT	S26L2	26	23	2	10	245	18	12.5	9.5	8	16.5	14	12	8	12	4	12
		S30L2	30	23	2	10	270	18.5	12.5	10	8	16.5	14	12.5	8	12	4	12
		S35L2	35	23	3	10	300	19.5	13	10	8	17	14.5	13	8	12	4	12
	HEAVY	S30H2	30	29	3	15	415	23	15.5	11.5	9	20	17	14.5	8	16	4	6
		S35H2	35	29	4	15	475	25	16.5	12	9.5	21	17.5	15.5	8	16	4	6
WIND ZONE 4	LIGHT	S26L1	26	22	2	8	190	16	11.5	8.5	8	15	12.5	11	8	12	4	12
		S30L1	30	22	2	8	205	16.5	11.5	9	8	15	13	11.5	8	12	4	12
		S35L1	35	22	3	8	230	17	12	9	8	15.5	13.5	11.5	8	12	4	12
	HEAVY	S30H1	30	25	3	12	320	20.5	13.5	10.5	8	18	15	13.5	8	16	4	6
		S35H1	35	25	4	12	350	21	14	10.5	8.5	18.5	15.5	13.5	8	16	4	6
WIND ZONE 5	LIGHT	S26L2	26	23	2	10	245	18	12.5	9.5	8	16.5	14	12	8	12	4	12
		S30L2	30	23	2	10	270	18.5	12.5	10	8	16.5	14	12.5	8	12	4	12
		S35L2	35	23	3	10	300	19.5	13	10	8	17	14.5	13	8	12	4	12
	HEAVY	S30H2	30	29	3	15	415	23	15.5	11.5	9	20	17	14.5	8	16	4	6
		S35H2	35	29	4	15	475	25	16.5	12	9.5	21	17.5	15.5	8	16	4	6

48″ Dia. Foundations Concrete Volume (cubic yards) = (0.465) x Drilled Pier Length

General Notes:

1. Values shown in the "Reactions at the Pole Base" column represent the minimum acceptable capacity allowed for design using a design CSR of 1.00.
2. Use chairs and spacers to maintain proper clearance.
3. For foundation, always use air-entrain concrete mix.

Foundation Selection:

1. Perform a standard penetration test at each proposed foundation site to determine "N" value.
2. Select the appropriate wind zone from M 1 drawing.
3. Select the soil type (Clay or Sand) that best describes the soil characteristics.
4. Get the appropriate standard pole case number from the plans or from the Engineer.
5. Select the appropriate column under "Standard Foundations" based on soil type and "N" value. Select the appropriate row based on the pole load case.
6. The foundation depth is the value shown in the "Standard Foundations" category where the column and the row intersect.
7. Use Construction Procedures and Design Methods prescribed by FHWA-NHI-10-016 for Reference Drilled Shafts.

Standard Strain Pole Foundation–All Soil Condition

Prepared in the Offices of:
Transportation Mobility and Safety Division
Signal Design Section
750 N.Greenfield Pkwy,Garner,NC 27529

Standard Strain Pole Foundation for All Soil Conditions

PLAN DATE:	OCTOBER 2017	DESIGNED BY:	C.B. COGDELL
PREPARED BY:	N. BITTING	REVIEWED BY:	D.C. SARKAR

REVISIONS	INIT.	DATE
Changed "Foundation Depth" to "Drilled Pier Length"in Conc. Eqn.	N.B.	7/13/2015

SCALE: 0 NA NONE

SEAL
NORTH CAROLINA PROFESSIONAL SEAL 028094 ENGINEER DEBESH C. SARKAR

DocuSigned by: Debesh C. Sarkar — 10/11/2017
SIGNATURE — DATE

11-OCT-2017 08:40
S:\MTS&SU\MTS Signals\Signal Design Section\Eastern Region\M8 Sheets\2016\2014 Sig_M8 Std. Strain Pole Found.-Saturated Soil Condition.dgn
rhizfrdgr

DocuSign Envelope ID: 65481297-1ACF-424A-9481-1381B6CE804E

Project No.	Sheet No.
R–3830	SCP–1

STATE OF NORTH CAROLINA
DIVISION OF HIGHWAYS

LEE COUNTY

LOCATION: NC 42 FROM US 421 TO SR 1529 (COX MILL ROAD) IN SANFORD

TYPE OF WORK: ITS

NAD 83/
NSRS 2007

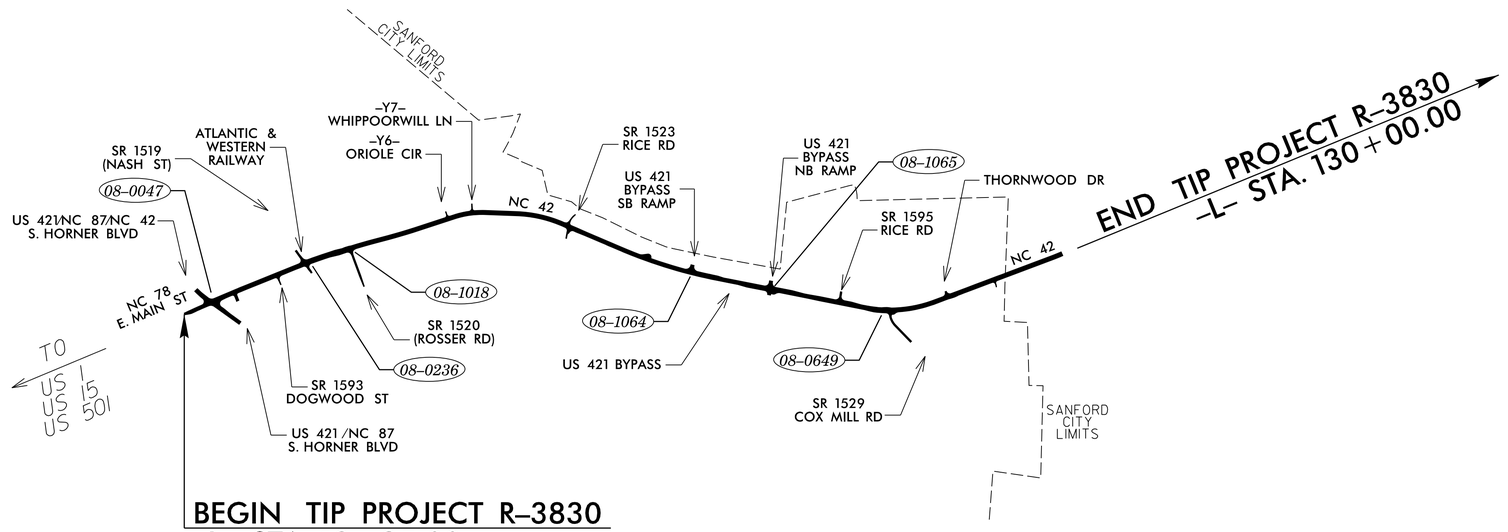

LEGEND

XX-XXXX – *SIGNAL INVENTORY NUMBER*

INDEX OF PLANS

SHEET NO.	SIG. INV. #	DESCRIPTION
SCP–1		Title Sheet
SCP–2		Legend
SCP–3 to SCP–13		Cable Routing Plans
SIG–14 to SCP–17		Splice Details

INTELLIGENT TRANSPORTATION AND SIGNALS UNIT

Contacts:

Mohd Aslami PE, CPM
State ITS and Signals Management Engineer

Neil Avery
ITS Engineer

Plans Prepared for:
DIVISION OF HIGHWAYS
TRANSPORTATION MOBILITY AND SAFETY DIVISION

Transportation Mobility and Safety Division · STATE OF NORTH CAROLINA · DEPARTMENT OF TRANSPORTATION · ITS and Signals Unit

750 N. Greenfield Parkway, Garner, NC 27529

TIMMONS GROUP
YOUR VISION ACHIEVED THROUGH OURS.

5410 Trinity Road
Suite 102
Raleigh, NC 27607
Tel:919.866.4951
Fax:919.859.5663
License: C-1652

Jeff Hochanadel, PE, PTOE
Senior Principal

Cliff Lawson PE, PTOE
Senior Transportation Designer

Transportation Engineer

APPROVED: DocuSigned by: Jeffrey P Hochanadel DA21830786794EA...

DATE: 10/2/2019

NORTH CAROLINA PROFESSIONAL SEAL 28430 ENGINEER JEFFREY P. HOCHANADEL

CONTRACT:

TIP PROJECT: R–3830

10/2/2019
SCP_R-3830_SIG_TSH.dgn
11:37:53 AM

DocuSign Envelope ID: 65481297-1ACF-424A-9481-1381B6CE804E

PROJECT REFERENCE NO.	SHEET NO.
R-3830	SCP. 2

1. INSTALL REA, PE – 22, SHIELDED, TWISTED PAIR COMMUNICATIONS CABLE
2. INSTALL REA, PE – 38, (FIGURE – 8) SHIELDED, TWISTED PAIR COMMUNICATIONS CABLE
3. INSTALL REA, PE – 39, (UNDERGROUND) SHIELDED, TWISTED PAIR COMMUNICATIONS CABLE
4. INSTALL SMFO CABLE
5. INSTALL MMFO CABLE
6. INSTALL FIBER OPTIC DROP CABLE
7. INSTALL TRACER WIRE
8. TRENCH
9. INSTALL PVC CONDUIT
10. INSTALL RIGID, GALVANIZED STEEL CONDUIT
11. INSTALL RIGID, GALVANIZED STEEL RISER WITH WEATHERHEAD
12. INSTALL RIGID, GALVANIZED STEEL RISER WITH FIBER OPTIC CABLE SEAL
13. INSTALL OUTER–DUCT POLYETHYLENE CONDUIT
14. INSTALL POLYETHYLENE CONDUIT
15. DIRECTIONAL DRILL CONDUIT
16. BORE AND JACK CONDUIT
17. INSTALL CABLE(S) IN EXISTING CONDUIT
18. INSTALL CABLE(S) IN NEW CONDUIT
19. INSTALL CABLE(S) IN EXISTING RISER AND INSTALL HEAT SHRINK RETROFIT KIT
20. INSTALL CABLE(S) IN NEW RISER
21. INSTALL CABLE(S) IN EXISTING CONDUIT STUBOUTS
22. INSTALL NEW CONDUIT INTO EXISTING CABINET BASE (USE EXISTING CONDUIT STUB–OUTS WHEN AVAILABLE)
23. INSTALL NEW RISER INTO EXISTING CABINET BASE (USE EXISTING CONDUIT STUB–OUTS WHEN AVAILABLE)
24. INSTALL NEW CONDUIT INTO EXISTING POLE MOUNTED CABINET
25. INSTALL NEW RISER INTO EXISTING POLE MOUNTED CABINET
26. INSALL ETHERNET EDGE SWITCH IN CABINET
27. INSTALL NEW TELEMETRY INTERFACE PANEL IN TRAFFIC SIGNAL CONTROLLER CABINET
28. INSTALL INTERCONNECT CENTER, PATCH PANEL, JUMPERS, AND FUSION SPLICE CABLE IN CABINET
29. INSTALL UNDERGROUND SPLICE ENCLOSURE
30. INSTALL AERIAL SPLICE ENCLOSURE
31. MODIFY SPLICE ENCLOSURE OR SPLICE CENTER
32. INSTALL BASE MOUNTED SPLICE CABINET
33. REMOVE EXISTING SPLICE CABINET
34. INSTALL CABINET FOUNDATION
35. REMOVE EXISTING CABINET FOUNDATION
36. INSTALL CCTV CAMERA ASSEMBLY
37. INSTALL CCTV CAMERA WOOD POLE
38. INSTALL CCTV CAMERA METAL POLE AND FOUNDATION
39. INSTALL JUNCTION BOX
40. INSTALL OVERSIZED JUNCTION BOX
41. REMOVE EXISTING JUNCTION BOX
42. INSTALL WOOD POLE
43. REMOVE EXISTING WOOD POLE
44. INSTALL AERIAL GUY ASSEMBLY
45. INSTALL STANDARD GUY ASSEMBLY
46. INSTALL SIDEWALK GUY ASSEMBLY
47. INSTALL MESSENGER CABLE
48. BACK PULL EXISTING COMMUNICATIONS CABLE
49. REMOVE EXISTING COMMUNICATIONS CABLE
50. INSTALL TELEPHONE SERVICE
51. INSTALL CABLE STORAGE RACKS (SNOW SHOES) AND STORE 100 FEET OF CABLE
52. INSTALL DELINEATOR MARKER
53. STORE 20 FEET OF COMMUNICATIONS CABLE
54. LASH CABLE(S) TO EXISTING SIGNAL/COMMUNICATIONS CABLE
55. LASH CABLE(S) TO EXISTING MESSENGER CABLE
56. LASH CABLE(S) TO NEW MESSENGER CABLE
57. MODIFY EXISTING ELECTRICAL SERVICE
58. INSTALL NEW ELECTRICAL SERVICE

LEGEND

- NEW FIBER OPTIC COMMUNICATIONS CABLE (FO)
- NEW TWISTED PAIR COMMUNICATIONS CABLE (TWIST PR)
- EXISTING COMMUNICATIONS CABLE (EXI)
- EXISTING COMMUNICATIONS CABLE TO BE REMOVED (REM)
- NEW AERIAL GUY ASSEMBLY
- NEW CONDUIT
- EXISTING CONDUIT
- NEW DIRECTIONAL DRILLED CONDUIT (DD)
- NEW BORED AND JACKED CONDUIT (B&J)
- NEW JUNCTION BOX
- EXISTING JUNCTION BOX
- NEW WOOD POLE
- EXISTING WOOD POLE
- NEW AERIAL SPLICE ENCLOSURE (S)
- NEW METAL POLE
- EXISTING METAL POLE
- NEW CCTV CAMERA ASSEMBLY
- NEW STANDARD GUY ASSEMBLY
- NEW STANDARD GUY USING EXISTING ANCHOR
- NEW SIDEWALK GUY ASSEMBLY
- NEW CABLE STORAGE RACKS (SNOW SHOES)
- EXISTING CONTROLLER AND CABINET
- EXISTING SPLICE CABINET (S)
- NEW SPLICE CABINET (S)
- SP SIGNAL POLE
- XX–XXXX SIGNAL INVENTORY NUMBER

CONSTRUCTION NOTE SYMBOLOGY KEY

- (XX) INDICATES NUMBER OF CABLES, LOOPS, ETC.
- XX INDICATES NUMBER OF FIBERS PER CABLE, TWISTED PAIRS PER CABLE, ETC.
- XX INDICATES NUMBER OF RISER(S)/CONDUIT(S)
- XX INDICATES DIAMETER OF RISER(S)/CONDUIT(S) (INCH)

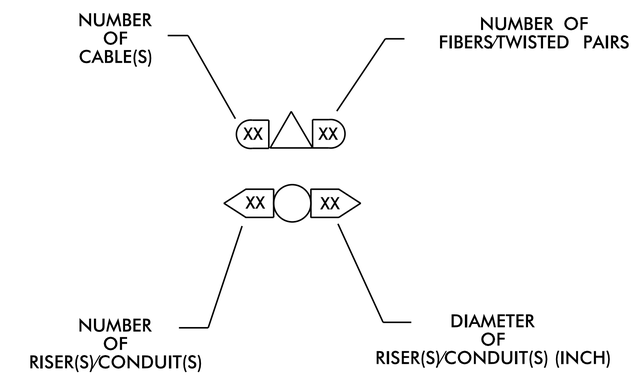

DOCUMENT NOT CONSIDERED FINAL UNLESS ALL SIGNATURES COMPLETED

TIMMONS GROUP
YOUR VISION ACHIEVED THROUGH OURS.
5410 Trinity Road
Suite 102
Raleigh, NC 27607
Tel:919.866.4951
Fax:919.859.5663
License: C-1652

Prepared for the Offices of:
NORTH CAROLINA DEPARTMENT OF TRANSPORTATION
Transportation Mobility and Safety Division
Traffic Engineering Branch
Traffic Signal Systems Section
750 N. Greenfield Pkwy., Garner, NC 27529

COMMUNICATIONS CABLE AND CONDUIT ROUTING PLAN

Division 6 Lee County SANFORD

PLAN DATE:	August 2019	REVIEWED BY:	J Hochanadel
PREPARED BY:	C Lawson	REVIEWED BY:	

SCALE: NTS

REVISIONS	INIT.	DATE

SEAL
NORTH CAROLINA PROFESSIONAL SEAL 28430 ENGINEER JEFFREY P. HOCHANADEL

Docusigned by: Jeffrey P. Hochanadel SIGNATURE 10/2/2019 DATE

SIG. INVENTORY NO.

10/2/2019
SCP 2.dgn
11:43:59 AM

DocuSign Envelope ID: 65481297-1ACF-424A-9481-1381B6CE804E

PROJECT REFERENCE NO.	SHEET NO.
R-3830	SCP. 3

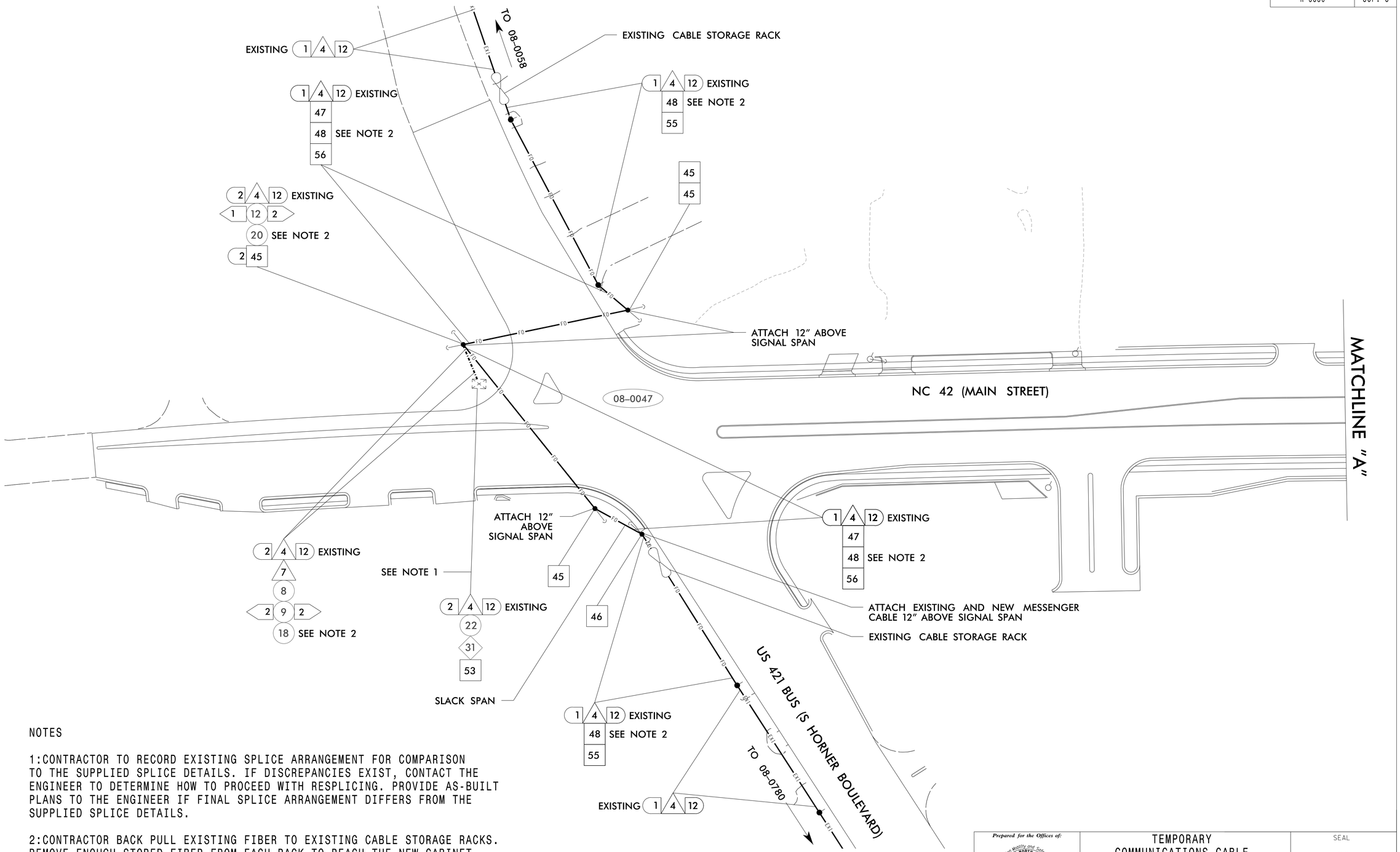

NOTES

1:CONTRACTOR TO RECORD EXISTING SPLICE ARRANGEMENT FOR COMPARISON TO THE SUPPLIED SPLICE DETAILS. IF DISCREPANCIES EXIST, CONTACT THE ENGINEER TO DETERMINE HOW TO PROCEED WITH RESPLICING. PROVIDE AS-BUILT PLANS TO THE ENGINEER IF FINAL SPLICE ARRANGEMENT DIFFERS FROM THE SUPPLIED SPLICE DETAILS.

2:CONTRACTOR BACK PULL EXISTING FIBER TO EXISTING CABLE STORAGE RACKS. REMOVE ENOUGH STORED FIBER FROM EACH RACK TO REACH THE NEW CABINET LOCATION AND PROVIDE A MINIMUM 20' STORAGE OF EACH CABLE IN THE SIGNAL CABINET. ADJUST EXISTING RACK SPACING ACCORDINGLY. RELASH EXISING FIBER TO EXISING AND NEW MESSENGER CABLE TO REACH THE NEW CABINET LOCATION.

DOCUMENT NOT CONSIDERED FINAL UNLESS ALL SIGNATURES COMPLETED

TIMMONS GROUP
YOUR VISION ACHIEVED THROUGH OURS.
5410 Trinity Road
Suite 102
Raleigh, NC 27607
Tel:919.866.4951
Fax:919.859.5663
License: C-1652

Prepared for the Offices of:
Transportation Mobility and Safety Division
NORTH CAROLINA DEPARTMENT OF TRANSPORTATION
Integrated Mobility Division
750 N. Greenfield Pkwy., Garner, NC 27529

SCALE 1"=40'

TEMPORARY COMMUNICATIONS CABLE AND CONDUIT ROUTING PLAN

Division 6 Lee County SANFORD

PLAN DATE: August 2019 REVIEWED BY: J Hochanadel

PREPARED BY: C Lawson REVIEWED BY:

REVISIONS	INIT.	DATE

SEAL
NORTH CAROLINA PROFESSIONAL SEAL 28430 ENGINEER JEFFREY P. HOCHANADEL

Docusigned by: Jeffrey P. Hochanadel 10/2/2019
SIGNATURE DATE

SIG. INVENTORY NO.

10/2/2019
SCP2_2017_Temporary.dgn
11:48:27 AM

DocuSign Envelope ID: 65481297-1ACF-424A-9481-1381B6CE804E

PROJECT REFERENCE NO.	SHEET NO.
R-3830	SCP. 3A

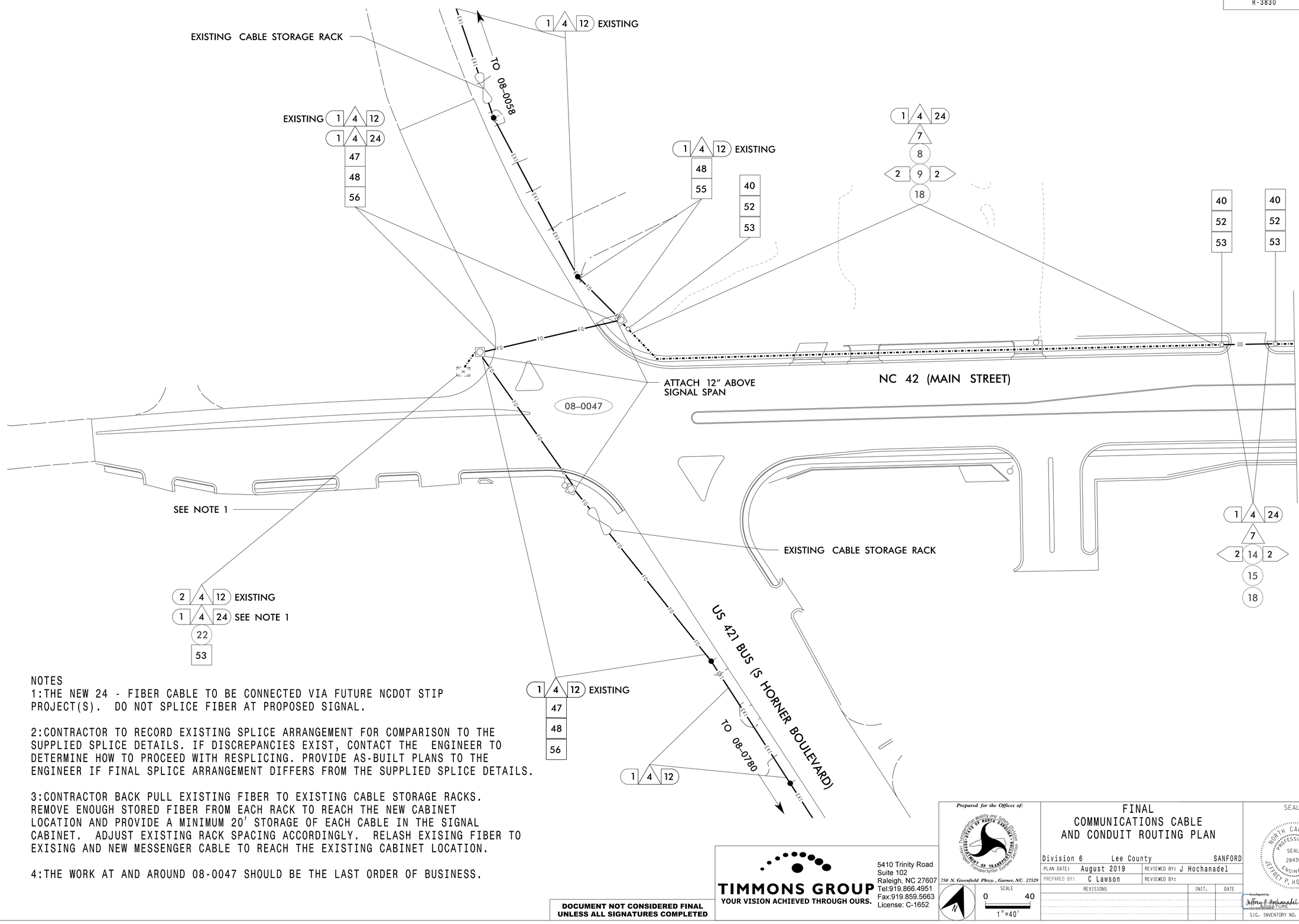

NOTES
1:THE NEW 24 - FIBER CABLE TO BE CONNECTED VIA FUTURE NCDOT STIP PROJECT(S). DO NOT SPLICE FIBER AT PROPOSED SIGNAL.

2:CONTRACTOR TO RECORD EXISTING SPLICE ARRANGEMENT FOR COMPARISON TO THE SUPPLIED SPLICE DETAILS. IF DISCREPANCIES EXIST, CONTACT THE ENGINEER TO DETERMINE HOW TO PROCEED WITH RESPLICING. PROVIDE AS-BUILT PLANS TO THE ENGINEER IF FINAL SPLICE ARRANGEMENT DIFFERS FROM THE SUPPLIED SPLICE DETAILS.

3:CONTRACTOR BACK PULL EXISTING FIBER TO EXISTING CABLE STORAGE RACKS. REMOVE ENOUGH STORED FIBER FROM EACH RACK TO REACH THE NEW CABINET LOCATION AND PROVIDE A MINIMUM 20' STORAGE OF EACH CABLE IN THE SIGNAL CABINET. ADJUST EXISTING RACK SPACING ACCORDINGLY. RELASH EXISING FIBER TO EXISING AND NEW MESSENGER CABLE TO REACH THE EXISTING CABINET LOCATION.

4:THE WORK AT AND AROUND 08-0047 SHOULD BE THE LAST ORDER OF BUSINESS.

DOCUMENT NOT CONSIDERED FINAL UNLESS ALL SIGNATURES COMPLETED

TIMMONS GROUP
YOUR VISION ACHIEVED THROUGH OURS.
5410 Trinity Road
Suite 102
Raleigh, NC 27607
Tel:919.866.4951
Fax:919.859.5663
License: C-1652

Prepared for the Offices of:
NORTH CAROLINA DEPARTMENT OF TRANSPORTATION
750 N. Greenfield Pkwy., Garner, NC 27529

SCALE 0 40 1"=40'

FINAL COMMUNICATIONS CABLE AND CONDUIT ROUTING PLAN

Division 6 Lee County SANFORD

PLAN DATE: August 2019 REVIEWED BY: J Hochanadel

PREPARED BY: C Lawson REVIEWED BY:

REVISIONS	INIT.	DATE

SEAL
NORTH CAROLINA PROFESSIONAL SEAL 28430 ENGINEER JEFFREY P. HOCHANADEL

Docusigned by: Jeffrey P Hochanadel 10/2/2019
SIGNATURE DATE

SIG. INVENTORY NO.

10/2/2019
SCP3A_Final.dgn
11:49:28 AM

DocuSign Envelope ID: 65481297-1ACF-424A-9481-1381B6CE804E

PROJECT REFERENCE NO.	SHEET NO.
R-3830	SCP. 4

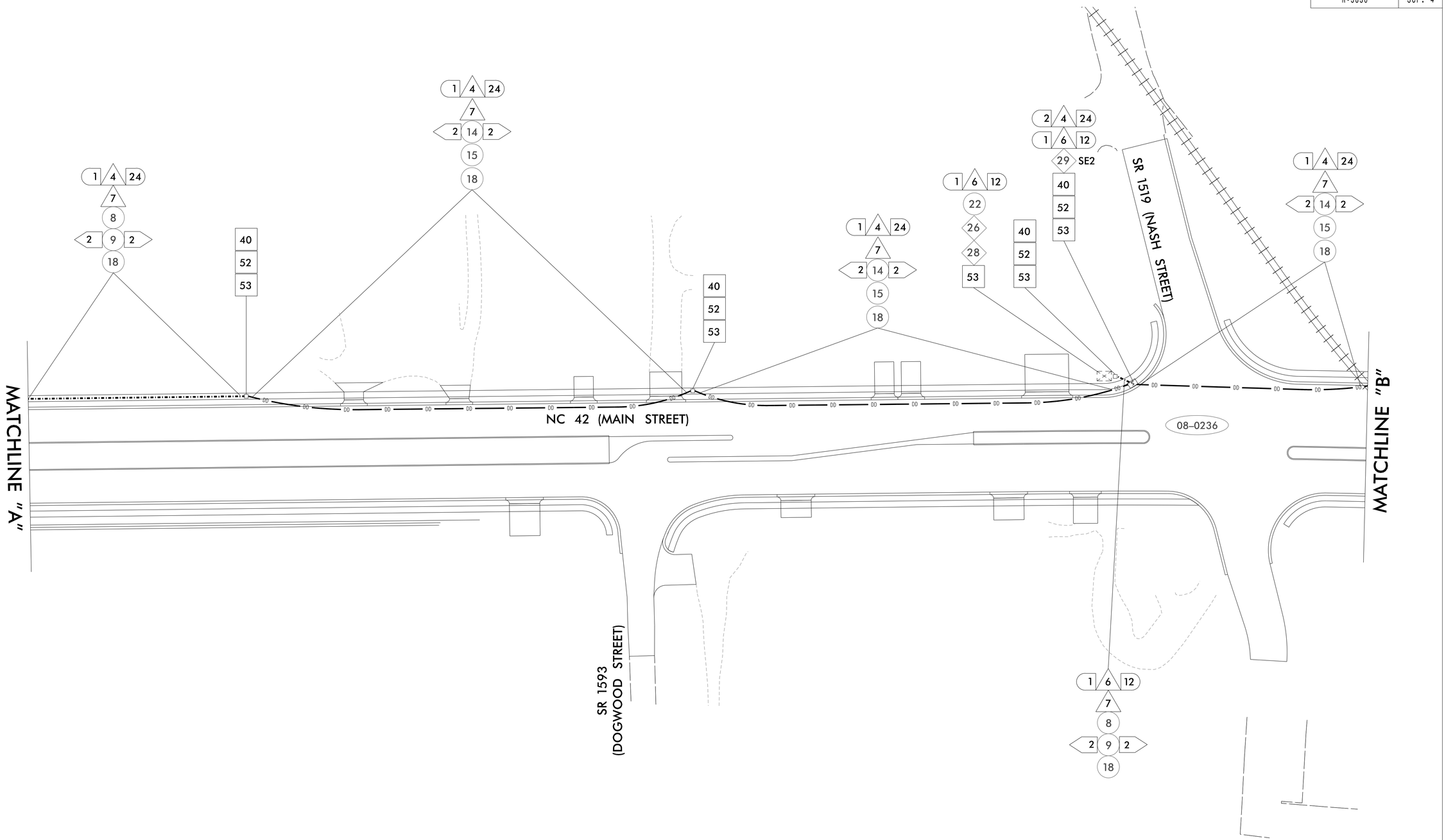

NOTES

1:UNLESS OTHERWISE NOTED, ALL NCDOT ATTACHMENTS ARE 40" BELOW POWER FRONT SIDE OF POLE.

10/2/2019
SCP4.dgn
11:51:14 AM

DOCUMENT NOT CONSIDERED FINAL UNLESS ALL SIGNATURES COMPLETED

TIMMONS GROUP
YOUR VISION ACHIEVED THROUGH OURS.
5410 Trinity Road
Suite 102
Raleigh, NC 27607
Tel:919.866.4951
Fax:919.859.5663
License: C-1652

Prepared for the Offices of:
NORTH CAROLINA DEPARTMENT OF TRANSPORTATION
Transportation Mobility and Safety Division
Traffic Engineering Branch
Transportation Systems Section
750 N. Greenfield Pkwy., Garner, NC 27529

SCALE
0 40
1"=40'

COMMUNICATIONS CABLE AND CONDUIT ROUTING PLAN

Division 6 Lee County SANFORD

PLAN DATE: August 2019	REVIEWED BY: J Hochanadel
PREPARED BY: C Lawson	REVIEWED BY:

REVISIONS	INIT.	DATE

SEAL
NORTH CAROLINA PROFESSIONAL SEAL 28430 ENGINEER JEFFREY P. HOCHANADEL

DocuSigned by: Jeffrey P. Hochanadel 10/2/2019
DESIGNER SIGNATURE DATE

SIG. INVENTORY NO.

DocuSign Envelope ID: 65481297-1ACF-424A-9481-1381B6CE804E

PROJECT REFERENCE NO.	SHEET NO.
R-3830	SCP. 5

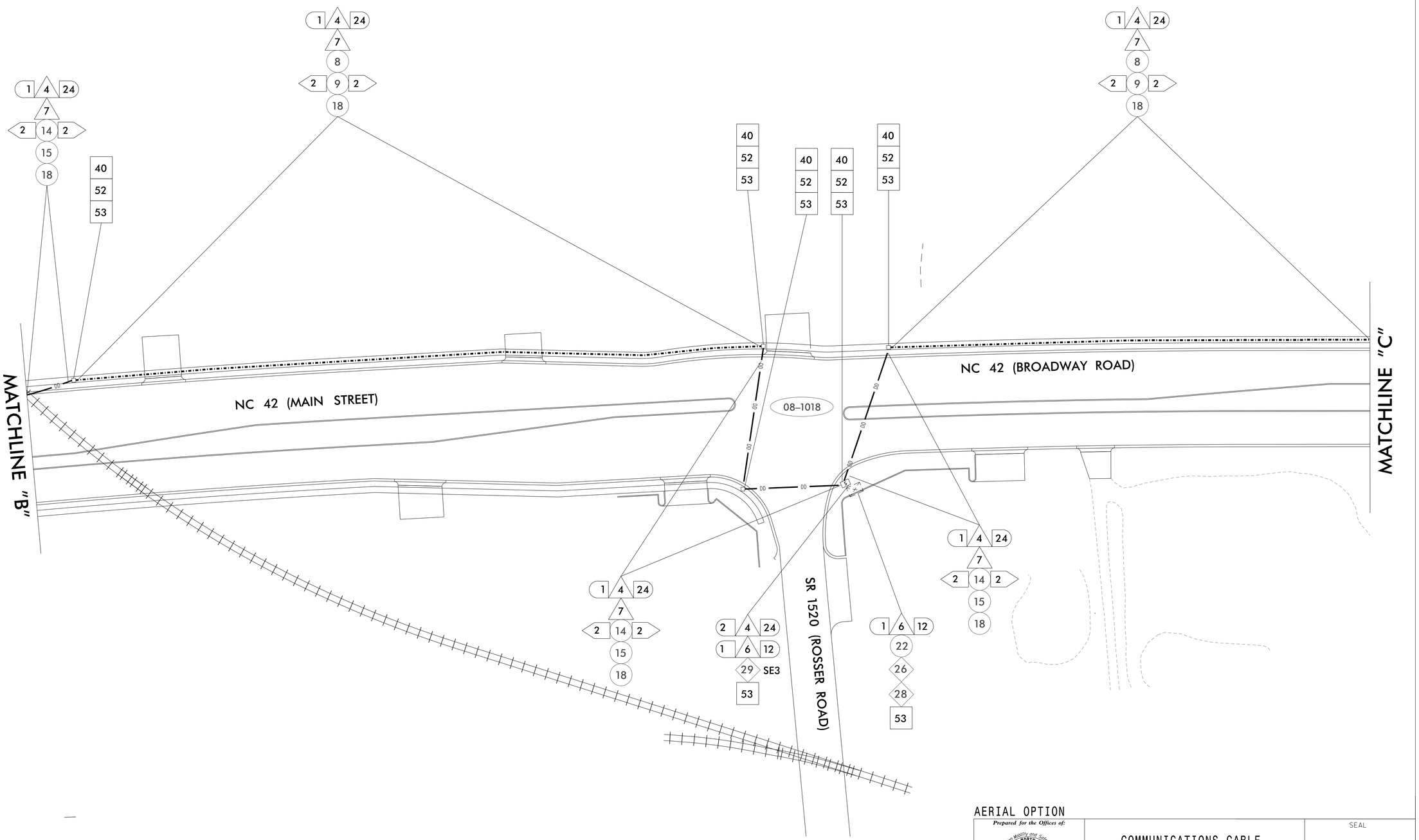

NOTES

1:UNLESS OTHERWISE NOTED, ALL NCDOT ATTACHMENTS ARE 40" BELOW POWER FRONT SIDE OF POLE.

AERIAL OPTION

DOCUMENT NOT CONSIDERED FINAL UNLESS ALL SIGNATURES COMPLETED

TIMMONS GROUP
YOUR VISION ACHIEVED THROUGH OURS.
5410 Trinity Road
Suite 102
Raleigh, NC 27607
Tel:919.866.4951
Fax:919.859.5663
License: C-1652

Prepared for the Offices of:
NORTH CAROLINA DEPARTMENT OF TRANSPORTATION
Transportation Mobility and Safety Division
Traffic Engineering Branch
Traffic Signal Systems Section
750 N. Greenfield Pkwy. , Garner, NC 27529

COMMUNICATIONS CABLE AND CONDUIT ROUTING PLAN

Division 6 Lee County SANFORD

PLAN DATE: August 2019 REVIEWED BY: J Hochanadel

PREPARED BY: C Lawson REVIEWED BY:

REVISIONS	INIT.	DATE

SCALE 0 40 1"=40'

SEAL
NORTH CAROLINA PROFESSIONAL SEAL 28430 ENGINEER JEFFREY P. HOCHANADEL

DocuSigned by: Jeffrey P. Hochanadel 10/2/2019
SIGNATURE DATE

SIG. INVENTORY NO.

10/2/2019
SCP_1_1.dgn
11:52:28 AM