DocuSign Envelope ID: FF19DDF6-E6A0-44E1-A9ED-3A3573A21641

PROJ. REFERENCE NO.	SHEET NO.
R-3830	TMP-7.22

HDR Engineering, Inc. of the Carolinas
555 Fayetteville St, Suite 900 Raleigh, N.C. 27601
N.C.B.E.L.S. License Number: F-0116

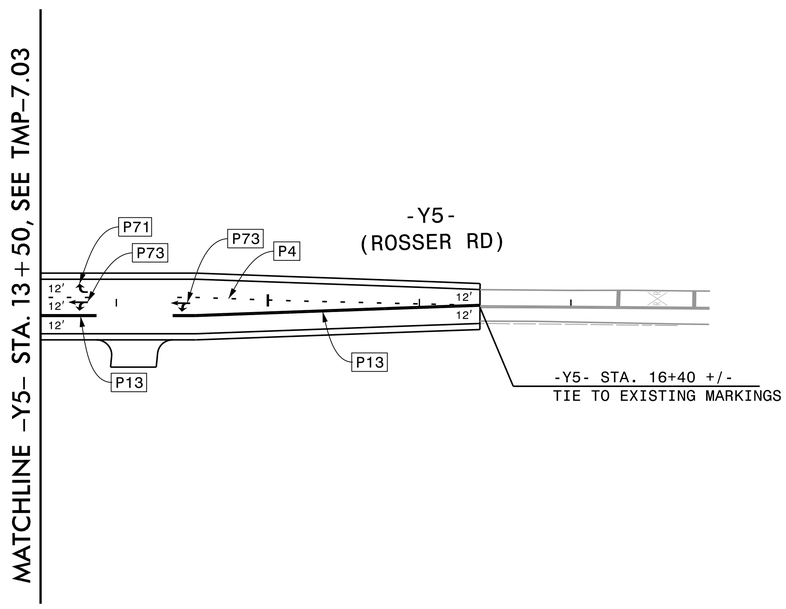

REVISIONS

APPROVED: Michael T. Rzepka

DATE: 7/12/2022

SEAL

NORTH CAROLINA PROFESSIONAL SEAL 15876 ENGINEER MICHAEL T. RZEPKA

DOCUMENT NOT CONSIDERED FINAL UNLESS ALL SIGNATURES COMPLETED

DIVISION OF HIGHWAYS · STATE OF NORTH CAROLINA · DEPARTMENT OF TRANSPORTATION · WORK ZONE TRAFFIC CONTROL

PHASE 3 - STEP 1

PLOT DRIVER: NCDOT_pdf_color_eng_50.plt PENTABLE: NCDOT_tcp.tbl
USER: CHARNDEN DATE: 5/4/2022 TIME: 10:55:25 AM
FILE: pw:\\pwhdruseas01:HDR_US_East_01\Documents\3322\10002133\10279033\6.0_CAD_BIM\6.2_WIP\Traffic\TrafficControl\TCP\R3830_TC_TMP-07.22.dgn