DocuSign Envelope ID: FF19DDF6-E6A0-44E1-A9ED-3A3573A21641

PROJ. REFERENCE NO.	SHEET NO.
R-3830	TMP-7.14

HDR Engineering, Inc. of the Carolinas
555 Fayetteville St, Suite 900 Raleigh, N.C. 27601
N.C.B.E.L.S. License Number: F-0116

MAINTAIN ACCESS TO PRIVATE PROPERTY WHERE THE PORTABLE CONCRETE BARRIER AND TEMPORARY SHORING ARE PRESENT.

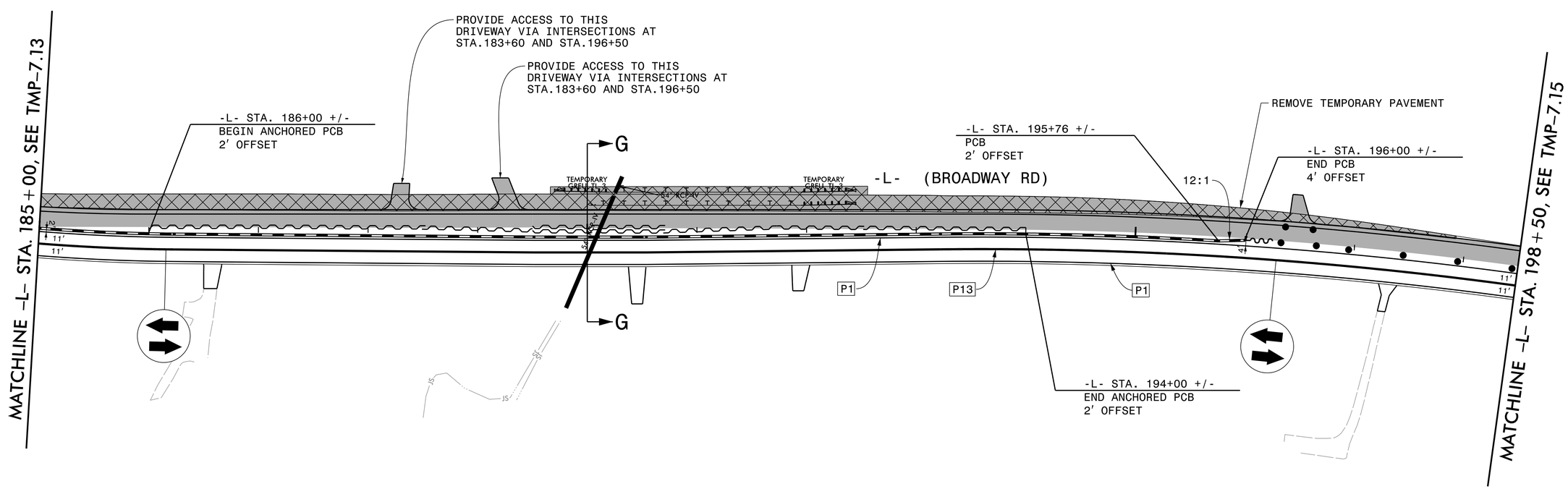

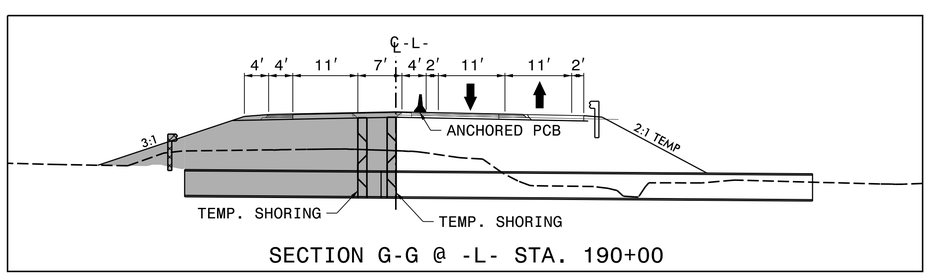

SECTION G-G @ -L- STA. 190+00

APPROVED: Michael T. Rzepka

DATE: 7/12/2022

SEAL

NORTH CAROLINA PROFESSIONAL SEAL 15876 ENGINEER MICHAEL T. RZEPKA

DOCUMENT NOT CONSIDERED FINAL UNLESS ALL SIGNATURES COMPLETED

DIVISION OF HIGHWAYS STATE OF NORTH CAROLINA DEPARTMENT OF TRANSPORTATION WORK ZONE TRAFFIC CONTROL

PHASE 3 - STEP 1

REVISIONS

PLOT DRIVER: NCDOT_pdf_color_eng_50.plt PENTABLE: NCDOT_tcp.tbl
USER: CHARNDEN DATE: 5/31/2022 TIME: 5:11:58 PM
FILE: pw:\\pwhdruseas01:HDR_US_East_01\Documents\3322\10002133\10279033\6.0_CAD_BIM\6.2_WIP\Traffic\TrafficControl\TCP\R3830_TC_TMP-07.14.dgn