DocuSign Envelope ID: 37628BD3-46A4-4920-A292-67ED288106E5

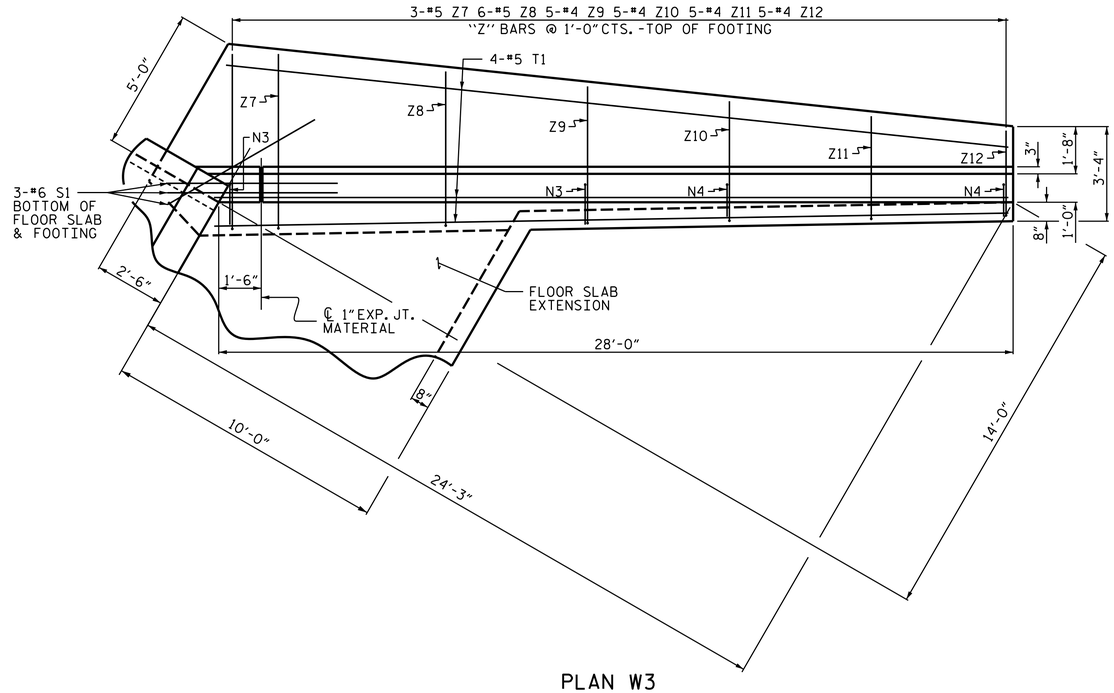

PLAN W3

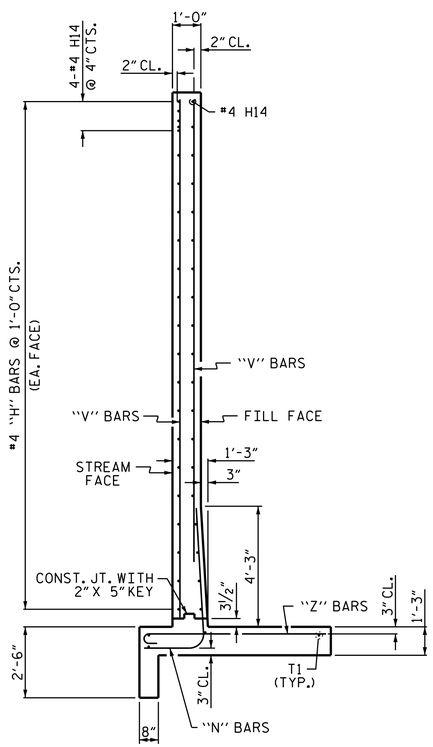

TYPICAL WING SECTION

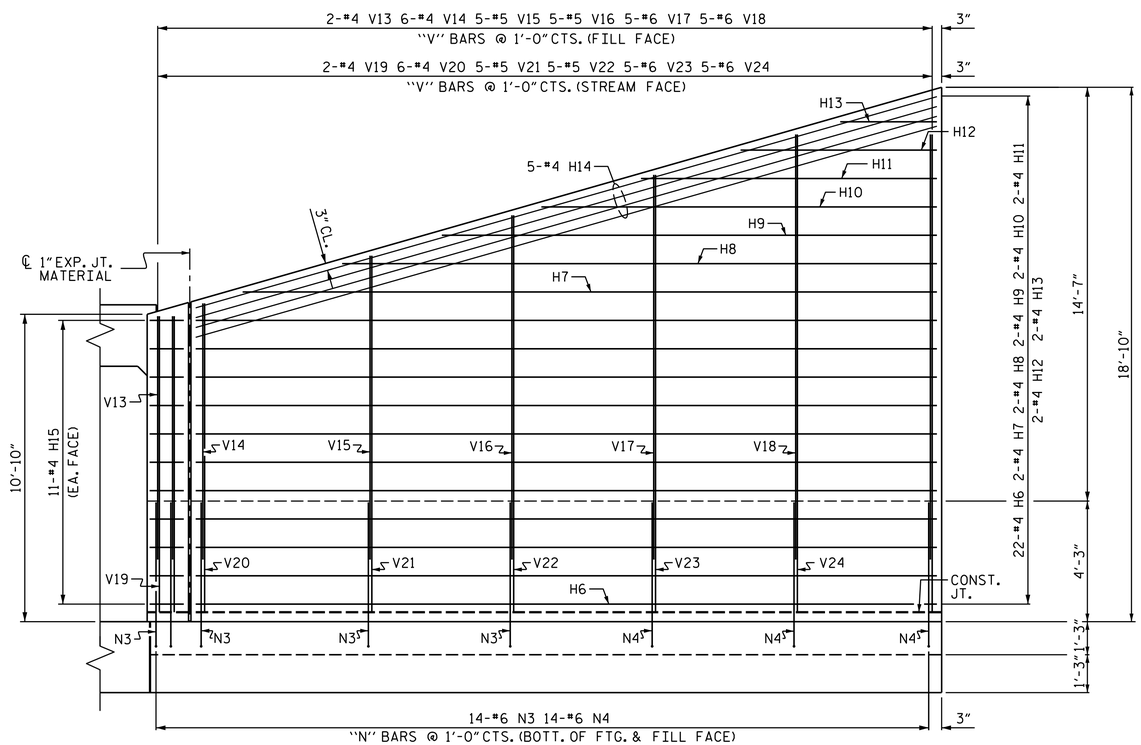

ELEVATION W3

BAR TYPES

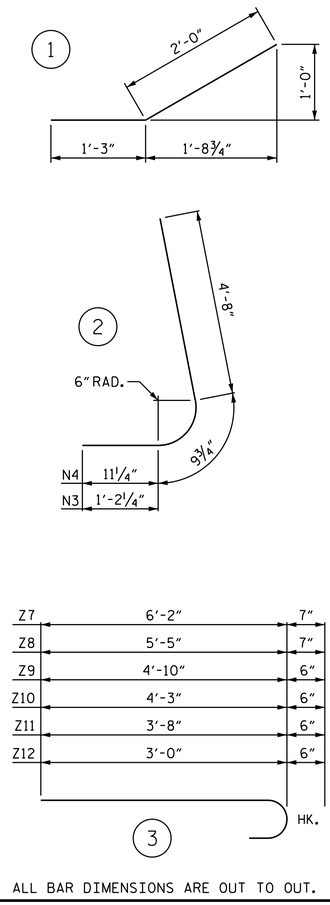

ALL BAR DIMENSIONS ARE OUT TO OUT.

BILL OF MATERIAL

BAR	NO.	SIZE	TYPE	LENGTH	WEIGHT
H6	22	#4	STR	26'-1"	383
H7	2	#4	STR	24'-5"	33
H8	2	#4	STR	20'-11"	28
H9	2	#4	STR	17'-5"	23
H10	2	#4	STR	13'-11"	19
H11	2	#4	STR	10'-5"	14
H12	2	#4	STR	6'-11"	9
H13	2	#4	STR	3'-5"	5
H14	5	#4	STR	27'-2"	91
H15	22	#4	1	3'-3"	48
N3	14	#6	2	6'-8"	140
N4	14	#6	2	6'-5"	135
S1	3	#6	STR	6'-0"	27
T1	4	#5	STR	27'-11"	116
V13	2	#4	STR	8'-6"	11
V14	6	#4	STR	9'-0"	36
V15	5	#5	STR	10'-8"	56
V16	5	#5	STR	12'-1"	63
V17	5	#6	STR	13'-6"	101
V18	5	#6	STR	14'-11"	112
V19	2	#4	STR	10'-5"	14
V20	6	#4	STR	10'-10"	43
V21	5	#5	STR	12'-6"	65
V22	5	#5	STR	14'-0"	73
V23	5	#6	STR	15'-5"	116
V24	5	#6	STR	16'-10"	126
Z7	3	#5	3	6'-9"	21
Z8	6	#5	3	6'-0"	38
Z9	5	#4	3	5'-4"	18
Z10	5	#4	3	4'-9"	16
Z11	5	#4	3	4'-2"	14
Z12	5	#4	3	3'-6"	12

REINFORCING STEEL
FOR 1 WING 2006 LBS

CLASS A CONCRETE
1 WING 22.7 CY
1 HEADWALL 1.8 CY
1 END CURTAIN WALL 3.0 CY
TOTAL 27.5 CY

NOTES

A 3 FOOT STRIP OF FILTER FABRIC SHALL BE ATTACHED TO THE FILL FACE OF THE WING COVERING THE ENTIRE LENGTH OF THE EXPANSION JOINT.

G1 BARS IN HEADWALL ARE INCLUDED WITH THE BARREL REINFORCING STEEL.

PROJECT NO. A-0009CA
GRAHAM COUNTY
STATION: 46+41.00 -L-

SHEET 13 OF 14

NORTH CAROLINA PROFESSIONAL SEAL 20125 ENGINEER MARSHALL C. CHEEK, JR.
DocuSigned by: Marshall C. Cheek, Jr.
6/1/2022

STATE OF NORTH CAROLINA
DEPARTMENT OF TRANSPORTATION
RALEIGH

WING W3 FOR
TRIPLE 12 FT. X 9 FT.
CONCRETE BOX CULVERT
RIGHT EXTENSION

DOCUMENT NOT CONSIDERED FINAL UNLESS ALL SIGNATURES COMPLETED

TGS ENGINEERS
706 HILLSBOROUGH STREET
SUITE 200
RALEIGH, NC 27603
PH (919) 773-8887
CORP. LICENSE NO.: C-0275

REVISIONS								SHEET NO.
NO.	BY:	DATE:	NO.	BY:	DATE:			C2-13
1			3					TOTAL SHEETS
2			4					14

STR #2

DRAWN BY : STM DATE : 12/21
CHECKED BY : MGC DATE : 02/22
DESIGN ENGINEER OF RECORD: STM DATE : 12/21

3/15/2022
X:\NCDOT\A-0009\Structures\A-0009CA\STR. #2 46+41.00 -L-\Final Plans\DGNs\412_025_A-0009CA_SMU_CU013_370132.dgn
User:smassinople