DocuSign Envelope ID: AFD2A1C5-74C7-4F03-B4BD-04B3EC693766

5/14/99

DOCUMENT NOT CONSIDERED FINAL UNLESS ALL SIGNATURES COMPLETED

PROJECT REFERENCE NO.	SHEET NO.
A-0009CA	UC-3B
DESIGNED BY: BCH	
DRAWN BY:	
CHECKED BY:	
APPROVED BY:	
REVISED:	
NORTH CAROLINA DEPARTMENT OF TRANSPORTATION	
UTILITIES ENGINEERING SEC. PHONE:(919)707-6690 FAX:(919)250-4151	UTILITY CONSTRUCTION PLANS ONLY

NORTH CAROLINA PROFESSIONAL SEAL 30499 ENGINEER BOBBY C HOUSER
Bobby Clyde Houser
4/8/2022

UTILITY CONSTRUCTION

PROJECT TYPICAL DETAILS

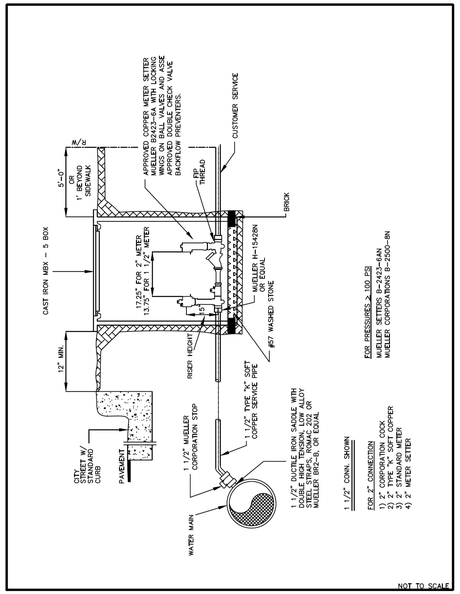

TYPICAL WATER SERVICE CONNECTION (1-1/2" AND 2")

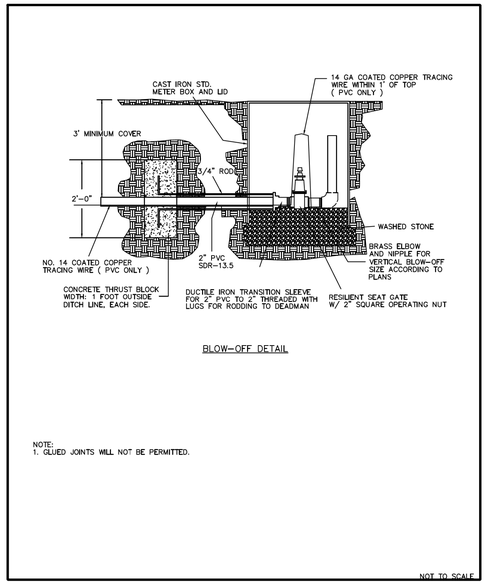

BLOW-OFF DETAIL

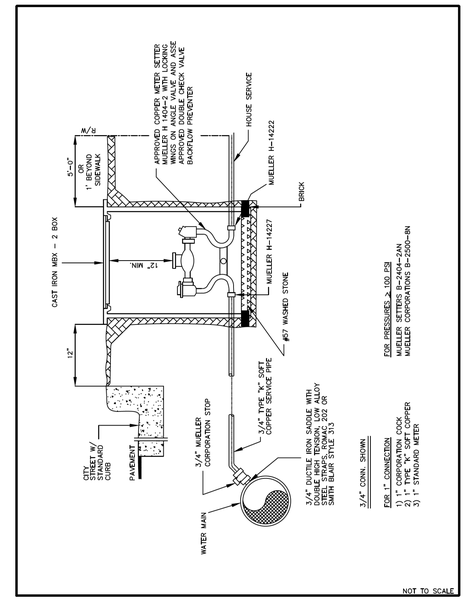

TYPICAL WATER SERVICE CONNECTION (3/4" AND 1")

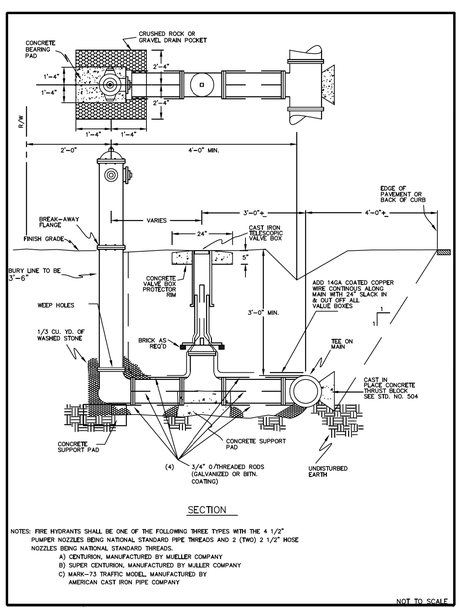

FIRE HYDRANT INSTALLATION DETAIL

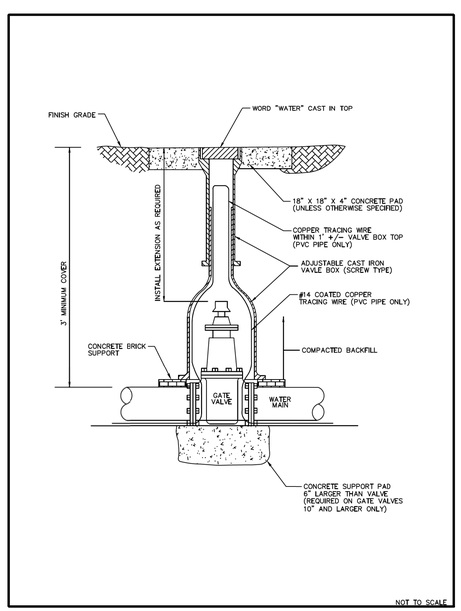

GATE VALVE ASSEMBLY

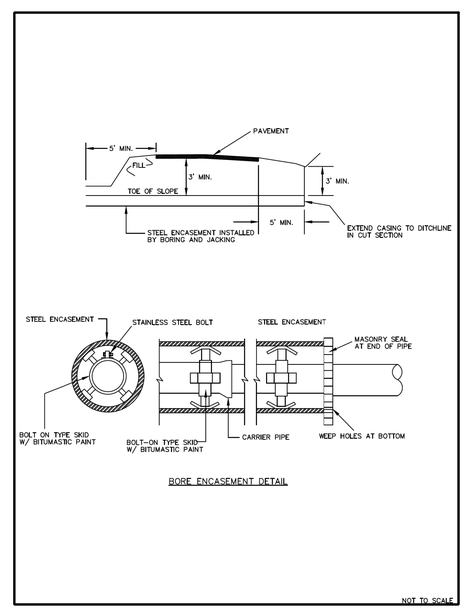

BORE ENCASEMENT DETAIL

3/4/2022
2:39:16 PM
0009\Utilities\A-0009CA\Proj\A-0009_Ut_notes_UC3_psh.dgn