DocuSign Envelope ID: D9FCF451-F467-4C29-AA03-5B336068DEA3

Welded Ring Stiffened Mast Arm Connection

PROJECT ID. NO.	SHEET NO.
A-0009CA	Sig.M5

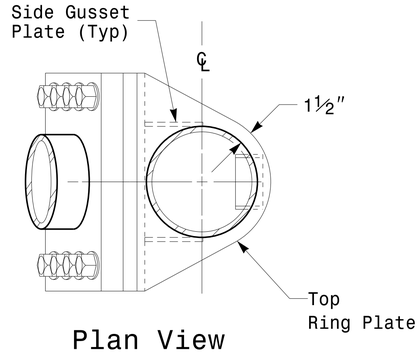

Plan View

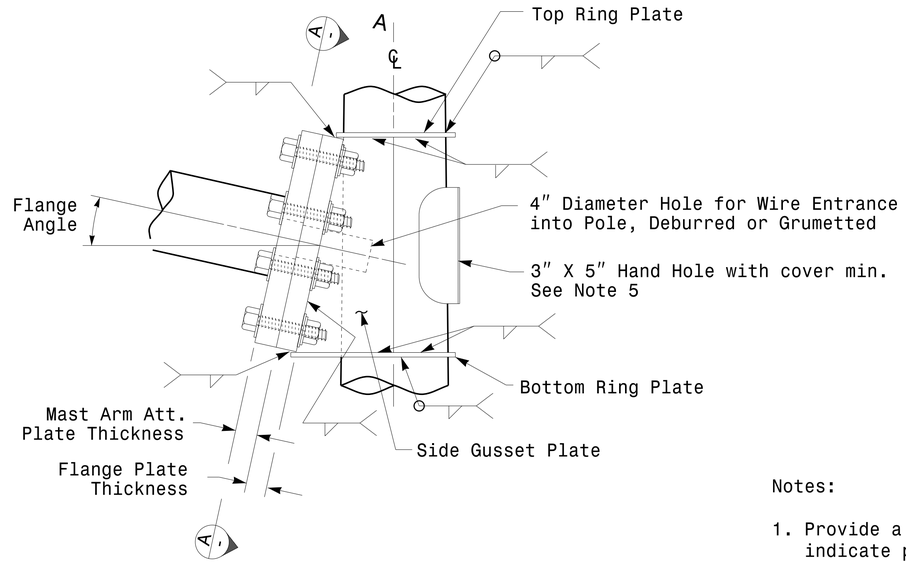

Side Elevation View

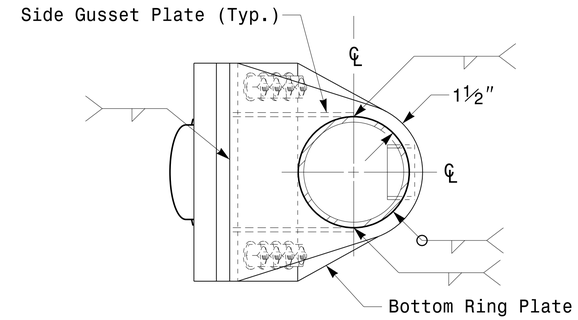

Bottom View

Notes:

1. Provide a permanent means of identification above the mast arm to indicate proper attachment orientation of the mast arm.
2. Designer will determine the size of all structural components, plates, fasteners, and welds shown unless they are already specified.
3. Fabricator is responsible for providing appropriate holes at drainage points to drain galvanizing materials.
4. For minimum edge distance follow AISC Table J3.4 and J3.5. For nominal bolt hole size use Table J3.3.
5. Provide upper handhole as necessary when shaft extensions are reguired for luminaire arms or camera. For poles without luminaires/camera, wiring can be done through the top of pole.
6. Allowable range of flange tilt angle will vary from 0° to as required.

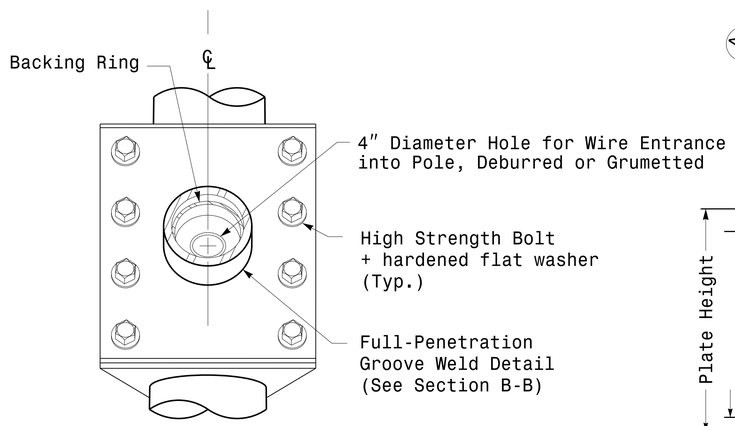

Front Elevation View

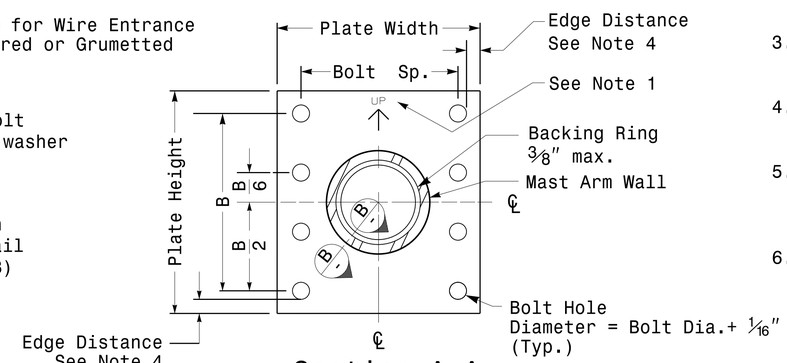

Section A-A
Mast Arm Attachment Plate

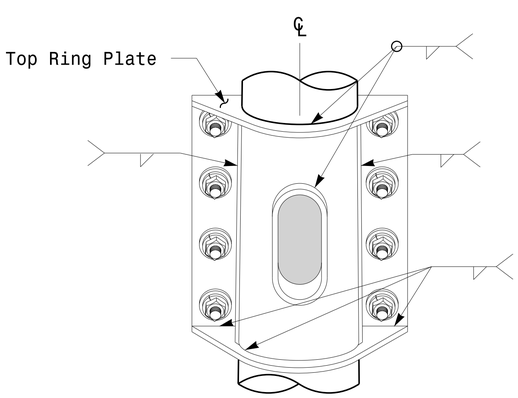

Back Elevation View

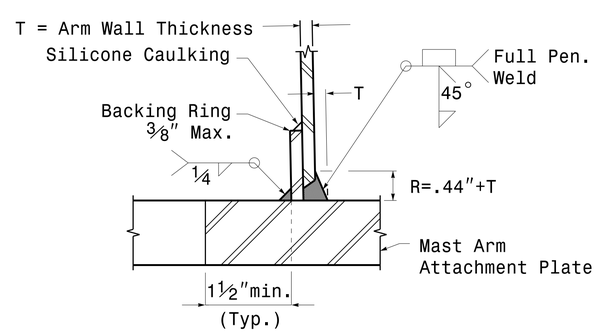

Section B-B
Full-Penetration Groove Weld Detail

Prepared in the Offices of:
Transportation Mobility and Safety Division
Signal Design Section
750 N.Greenfield Pkwy,Garner,NC 27529

SCALE
0 NA
NONE

Typical Fabrication Details
For
Mast Arm Connection To Pole

PLAN DATE:	OCTOBER 2017	DESIGNED BY:	C.F.ANDREWS
PREPARED BY:	N. BITTING	REVIEWED BY:	D.C. SARKAR

REVISIONS	INIT.	DATE

SEAL
NORTH CAROLINA PROFESSIONAL SEAL 028094 ENGINEER DEBESH C. SARKAR

DocuSigned by: Debesh C. Sarkar
44EBE3E3...
SIGNATURE
10/11/2017
DATE

Fabrication Details – Mast Arm Connection

11-OCT-2017 08:35
S:\TSAS\TS Signals\Signal Design Section\Eastern Region\M Sheets\2016\2014 Sig.M5 Std. Connection Fabrication Details-Mast Arm Poles.dgn
rsitnsar