DocuSign Envelope ID: D9FCF451-F467-4C29-AA03-5B336068DEA3

PROJECT REFERENCE NO.	SHEET NO.
A-0009CA	Sig.2.7

EDI MODEL 2018ECL-NC CONFLICT MONITOR PROGRAMMING DETAIL

(remove jumpers and set switches as shown)

REMOVE DIODE JUMPERS 2-5, 2-6, 2-9, 2-11, 2-12, 4-12, 4-14, 5-9, 5-11, 5-12, 6-9, 6-11, 9-11, 9-12, 11-12, AND 12-14.

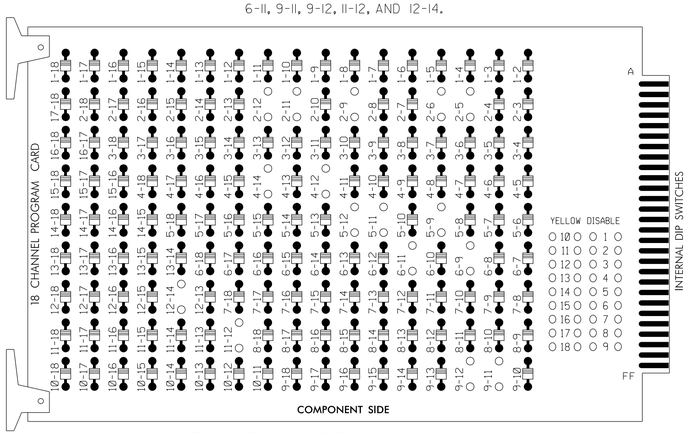

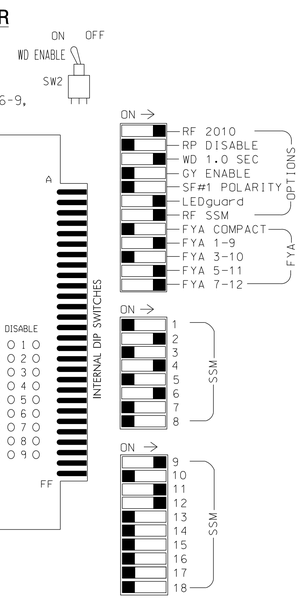

REMOVE JUMPERS AS SHOWN

■ = DENOTES POSITION OF SWITCH

NOTES:

1. Card is provided with all diode jumpers in place. Removal of any jumper allows its channels to run concurrently.
2. Ensure jumpers SEL2-SEL5 and SEL9 are present on the monitor board.
3. Ensure that Red Enable is active at all times during normal operation.
4. Connect serial cable from conflict monitor to comm. port 1 of 2070 controller. Ensure conflict monitor communicates with 2070.

NOTES

1. To prevent "flash-conflict" problems, insert red flash program blocks for all unused vehicle load switches in the output file. The installer shall verify that signal heads flash in accordance with the Signal Plans.
2. Program controller to start up in phase 2 Green and 6 Green.
3. If this signal will be managed by an ATMS software, enable controller and detector logging for all detectors used at this location.
4. The cabinet and controller are part of the US 129 - NC143 Closed Loop System.

EQUIPMENT INFORMATION

CONTROLLER.....2070LX
CABINET.....332 W/AUX
SOFTWARE.....ECONOLITE ASC/3-2070
CABINET MOUNT.....BASE
OUTPUT FILE POSITIONS...18 WITH AUX. OUTPUT FILE
LOAD SWITCHES USED.....S2,S5,S6,S7,S8,AUX S1,AUX S4, AUX S5
PHASES USED.....2,4,4 PED,5,6
OVERLAP "A".....*
OVERLAP "B".....NOT USED
OVERLAP "C".....*
OVERLAP "D".....*

* See overlap programming detail on sheet 2

SIGNAL HEAD HOOK-UP CHART

LOAD SWITCH NO.	S1	S2	S3	S4	S5	S6	S7	S8	S9	S10	S11	S12	AUX S1	AUX S2	AUX S3	AUX S4	AUX S5	AUX S6
CMU CHANNEL NO.	1	2	13	3	4	14	5	6	15	7	8	16	9	10	17	11	12	18
PHASE	1	2	2 PED	3	4	4 PED	5	6	6 PED	7	8	8 PED	OLA	OLB	SPARE	OLC	OLD	SPARE
SIGNAL HEAD NO.	NU	21,22	NU	NU	41,42	P41, P42	51★	62,63	NU	NU	NU	NU	61★	NU	NU	51★	43★	NU
RED		128			101			134									A101	
YELLOW		129			102		*	135										
GREEN		130			103			136										
RED ARROW													A121			A114		
YELLOW ARROW													A122			A115	A102	
FLASHING YELLOW ARROW													A123			A116	A103	
GREEN ARROW							133											
✋						104												
🚶						106												

NU = Not Used

* Denotes install load resistor. See load resistor installation detail this sheet.

★ See pictorial of head wiring in detail this sheet.

INPUT FILE POSITION LAYOUT

(front view)

		1	2	3	4	5	6	7	8	9	10	11	12	13	14
FILE "I"	U	SLOT EMPTY	Ø2 2A	SLOT EMPTY	WIRED INPUT ⊗	SLOT EMPTY	Ø 4A	SLOT EMPTY	SLOT EMPTY	SLOT EMPTY	SLOT EMPTY	SLOT EMPTY	NOT USED	SLOT EMPTY	FS DC ISOLATOR
	L		NOT USED				NOT USED						Ø4 PED DC ISOLATOR		ST DC ISOLATOR
FILE "J"	U	Ø5 5A	Ø6 6A	SLOT EMPTY	SLOT EMPTY	SLOT EMPTY	SLOT EMPTY	SLOT EMPTY	SLOT EMPTY	Ø5 5B	SLOT EMPTY	SLOT EMPTY	SLOT EMPTY	SLOT EMPTY	SLOT EMPTY
	L	NOT USED	Ø6 6B							NOT USED					

EX.: 1A, 2A, ETC. = LOOP NO.'S

⊗ Wired Input - Do not populate slot with detector card

FS = FLASH SENSE
ST = STOP TIME

INPUT FILE CONNECTION & PROGRAMMING CHART

LOOP NO.	LOOP TERMINAL	INPUT FILE POS.	PIN NO.	DETECTOR NO.	NEMA PHASE	CALL	EXTEND TIME	DELAY TIME	ADDED INITIAL	DETECTOR TYPE
2A	TB2-5,6	I2U	39	2	2	YES				N
4A	TB4-9,10	I6U	41	4	4	YES		3		N
5A[1]	TB3-1,2	J1U	55	5 ★	5	YES		15		N
	-	I4U	47	22 ★	2	YES				N
5B	TB7-9,10	J9U	59	15	5	YES		15		N
6A	TB3-5,6	J2U	40	6	6	YES				N
6B	TB3-7,8	J2L	44	16	6	YES		3		N
PED PUSH BUTTONS										
P41,P42	TB8-5,6	I12L	69	PED 4	4 PED					

NOTE: INSTALL DC ISOLATOR IN INPUT FILE SLOT I12.

[1] Add jumper from J1-W to I4-W, on rear of input file.

★ For the detectors to work as shown on the signal design plan, see the Vehicle Detector Setup Programming Detail for Alternate Phasing on sheet 2.

INPUT FILE POSITION LEGEND: J2L
FILE J
SLOT 2
LOWER

FYA SIGNAL WIRING DETAIL

(wire signal heads as shown)

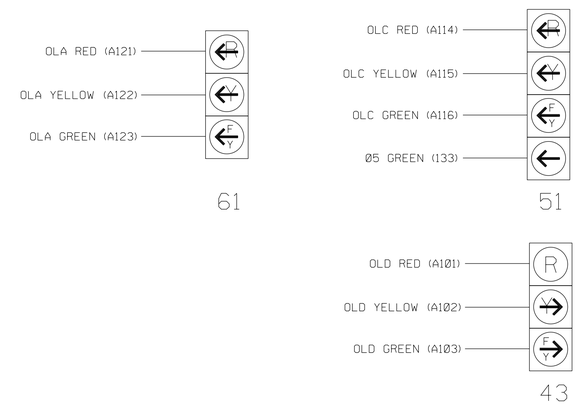

LOAD RESISTOR INSTALLATION DETAIL

(install resistors as shown)

ACCEPTABLE VALUES

VALUE (ohms)	WATTAGE
1.5K - 1.9K	25W (min)
2.0K - 3.0K	10W (min)

COUNTDOWN PEDESTRIAN SIGNAL OPERATION

Countdown Ped Signals are required to display timing only during Ped Clearance Interval. Consult Ped Signal Module user's manual for instructions on selecting this feature.

THIS ELECTRICAL DETAIL IS FOR
THE SIGNAL DESIGN: 14-0751
DESIGNED: May 2022
SEALED: 05/10/2022
REVISED: N/A

Electrical Detail - Sheet 1 of 3

DOCUMENT NOT CONSIDERED FINAL UNLESS ALL SIGNATURES COMPLETED

ELECTRICAL AND PROGRAMMING DETAILS FOR:

US 129
at
SR 1106 (E. Main Street)

Division 14 Graham County Robbinsville

PLAN DATE: May 2022 REVIEWED BY: J. Ma
PREPARED BY: M.L. Stygles REVIEWED BY:

REVISIONS	INIT.	DATE

Prepared for the Offices of:
Mobility and Safety Division
Traffic Engineering & Safety Systems Branch
STATE OF NORTH CAROLINA DEPT. OF TRANSPORTATION
750 N.Greenfield Pkwy,Garner,NC 27529

SEAL
NORTH CAROLINA PROFESSIONAL SEAL 033108 ENGINEER JIANXIN MA

DocuSigned by:
Jianxin Ma
B2CE1953081444F...
5/10/2022
DATE

SIG. INVENTORY NO. 14-0751