DocuSign Envelope ID: D9FCF451-F467-4C29-AA03-5B336068DEA3

PROJECT REFERENCE NO.	SHEET NO.
A-0009CA	Sig.2.4

EDI MODEL 2018ECL-NC CONFLICT MONITOR PROGRAMMING DETAIL

(remove jumpers and set switches as shown)

REMOVE DIODE JUMPERS 2-5, 2-6, 2-9, 2-11, 2-12, 4-12, 4-14, 5-9, 5-11, 5-12, 6-9, 6-11, 9-11, 9-12, 11-12, AND 12-14.

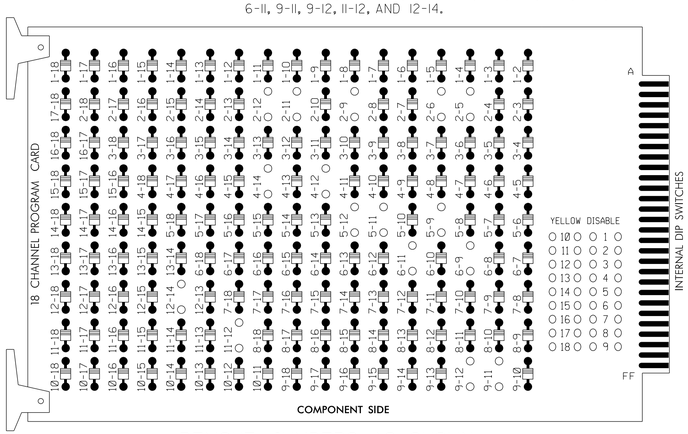

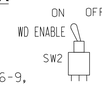

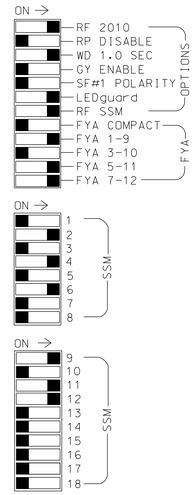

■ = DENOTES POSITION OF SWITCH

REMOVE JUMPERS AS SHOWN

NOTES:

1. Card is provided with all diode jumpers in place. Removal of any jumper allows its channels to run concurrently.
2. Ensure jumpers SEL2-SEL5 and SEL9 are present on the monitor board.
3. Ensure that Red Enable is active at all times during normal operation.
4. Connect serial cable from conflict monitor to comm. port 1 of 2070 controller. Ensure conflict monitor communicates with 2070.

NOTES

1. To prevent "flash-conflict" problems, insert red flash program blocks for all unused vehicle load switches in the output file. The installer shall verify that signal heads flash in accordance with the Signal Plans.
2. Program controller to start up in phase 2 Green and 6 Green.
3. If this signal will be managed by an ATMS software, enable controller and detector logging for all detectors used at this location.

EQUIPMENT INFORMATION

CONTROLLER.....2070LX
CABINET.....332 W/AUX
SOFTWARE.....ECONOLITE ASC/3-2070
CABINET MOUNT.....BASE
OUTPUT FILE POSITIONS...18 WITH AUX. OUTPUT FILE
LOAD SWITCHES USED.....S2,S5,S6,S7,S8,AUX S1,AUX S4, AUX S5
PHASES USED.....2,4,4 PED,5,6
OVERLAP "A".....*
OVERLAP "B".....NOT USED
OVERLAP "C".....*
OVERLAP "D".....*

* See overlap programming detail on sheet 2

SIGNAL HEAD HOOK-UP CHART

LOAD SWITCH NO.	S1	S2	S3	S4	S5	S6	S7	S8	S9	S10	S11	S12	AUX S1	AUX S2	AUX S3	AUX S4	AUX S5	AUX S6
CMU CHANNEL NO.	1	2	13	3	4	14	5	6	15	7	8	16	9	10	17	11	12	18
PHASE	1	2	2 PED	3	4	4 PED	5	6	6 PED	7	8	8 PED	OLA	OLB	SPARE	OLC	OLD	SPARE
SIGNAL HEAD NO.	NU	21,22	NU	NU	41,42	P41, P42	51★	62,63	NU	NU	NU	NU	61★	NU	NU	51★	43★	NU
RED		128			101			134									A101	
YELLOW		129			102		*	135										
GREEN		130			103			136										
RED ARROW													A121			A114		
YELLOW ARROW													A122			A115	A102	
FLASHING YELLOW ARROW													A123			A116	A103	
GREEN ARROW							133											
✋						104												
🚶						106												

NU = Not Used

* Denotes install load resistor. See load resistor installation detail this sheet.

★ See pictorial of head wiring in detail this sheet.

INPUT FILE POSITION LAYOUT

(front view)

		1	2	3	4	5	6	7	8	9	10	11	12	13	14
FILE "I"	U	SLOT EMPTY	SLOT EMPTY	SLOT EMPTY	SLOT EMPTY	SLOT EMPTY	SLOT EMPTY	SLOT EMPTY	SLOT EMPTY	SLOT EMPTY	SLOT EMPTY	SLOT EMPTY	NOT USED	SLOT EMPTY	FS DC ISOLATOR
	L												Ø4 PED DC ISOLATOR		ST DC ISOLATOR
FILE "J"	U	SLOT EMPTY	SLOT EMPTY	SLOT EMPTY	SLOT EMPTY	SLOT EMPTY	SLOT EMPTY	SLOT EMPTY	SLOT EMPTY	SLOT EMPTY	SLOT EMPTY	SLOT EMPTY	SLOT EMPTY	SLOT EMPTY	SLOT EMPTY
	L														

EX.: 1A, 2A, ETC. = LOOP NO.'S

FS = FLASH SENSE
ST = STOP TIME

INPUT FILE CONNECTION & PROGRAMMING CHART

LOOP NO.	LOOP TERMINAL	INPUT FILE POS.	PIN NO.	DETECTOR NO.	NEMA PHASE	CALL	EXTEND TIME	DELAY TIME	ADDED INITIAL	DETECTOR TYPE
PED PUSH BUTTONS										
P41,P42	TB8-5,6	I12L	69	PED 4	4 PED					

NOTE: INSTALL DC ISOLATOR IN INPUT FILE SLOT I12.

INPUT FILE POSITION LEGEND: J2L
FILE J
SLOT 2
LOWER

SPECIAL DETECTOR NOTE

Install a multizone microwave detection system for vehicle detection. Perform installation according to manufacturer's directions and NCDOT engineer-approved mounting locations to accomplish the detection schemes shown on the Signal Design Plans.

FYA SIGNAL WIRING DETAIL

(wire signal heads as shown)

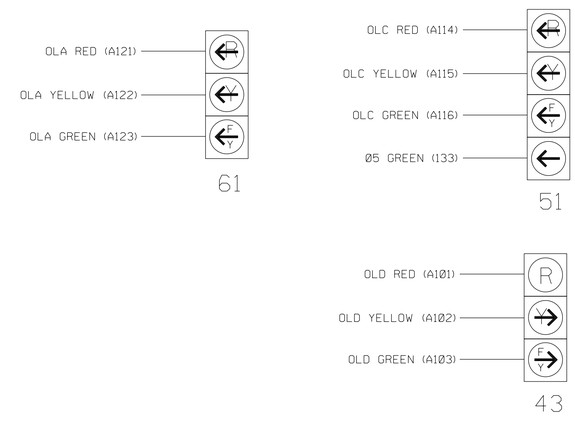

LOAD RESISTOR INSTALLATION DETAIL

(install resistors as shown)

ACCEPTABLE VALUES	
VALUE (ohms)	WATTAGE
1.5K - 1.9K	25W (min)
2.0K - 3.0K	10W (min)

COUNTDOWN PEDESTRIAN SIGNAL OPERATION

Countdown Ped Signals are required to display timing only during Ped Clearance Interval. Consult Ped Signal Module user's manual for instructions on selecting this feature.

THIS ELECTRICAL DETAIL IS FOR
THE SIGNAL DESIGN: 14-0751T2
DESIGNED: May 2022
SEALED: 05/10/2022
REVISED: N/A

Electrical Detail - Sheet 1 of 2 - Temporary Design 2

DOCUMENT NOT CONSIDERED FINAL UNLESS ALL SIGNATURES COMPLETED

ELECTRICAL AND PROGRAMMING DETAILS FOR:

US 129
at
SR 1106 (E. Main Street)

Division 14 Graham County Robbinsville

PLAN DATE: May 2022 REVIEWED BY: J. Ma
PREPARED BY: M.L. Stygles REVIEWED BY:

REVISIONS	INIT.	DATE

Prepared for the Offices of:
Traffic Engineering, Mobility and Safety Division
State of North Carolina Department of Transportation
Signals Management Section
750 N.Greenfield Pkwy,Garner,NC 27529

SEAL
NORTH CAROLINA PROFESSIONAL SEAL 033108 ENGINEER JIANXIN MA

DocuSigned by: Jianxin Ma 5/10/2022
B27E1953081444F...
DATE

SIG. INVENTORY NO. 14-0751T2