DocuSign Envelope ID: 92CE6338-7683-4004-B5B9-A21C5A37EFBC

PROJECT REFERENCE NO.	SHEET NO.
A-0009CA	2C-9

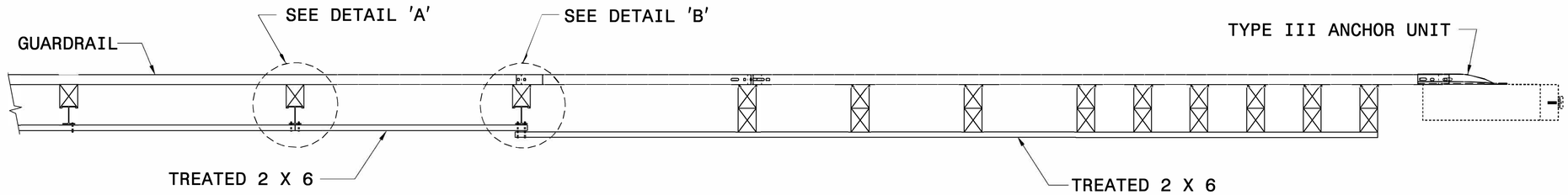

PLAN

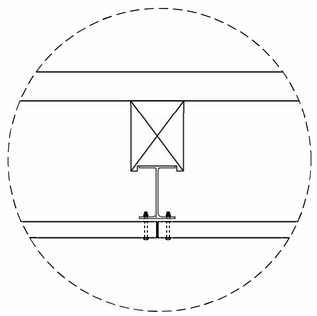

DETAIL 'A'

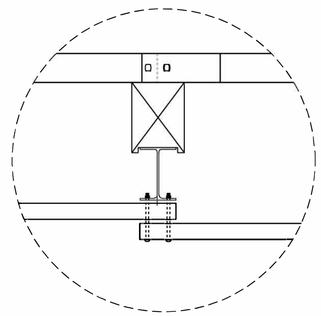

DETAIL 'B'

USE BOLTS AND NUTS FROM TYPE III ANCHOR UNIT TO FASTEN 2 X 6 WOOD RAILS TO THE WOOD POSTS - BOLTS MAY NEED TO BE LENGTHENED TO ACCOMMODATE FOR THE 2 X 6 WOOD RAILS.

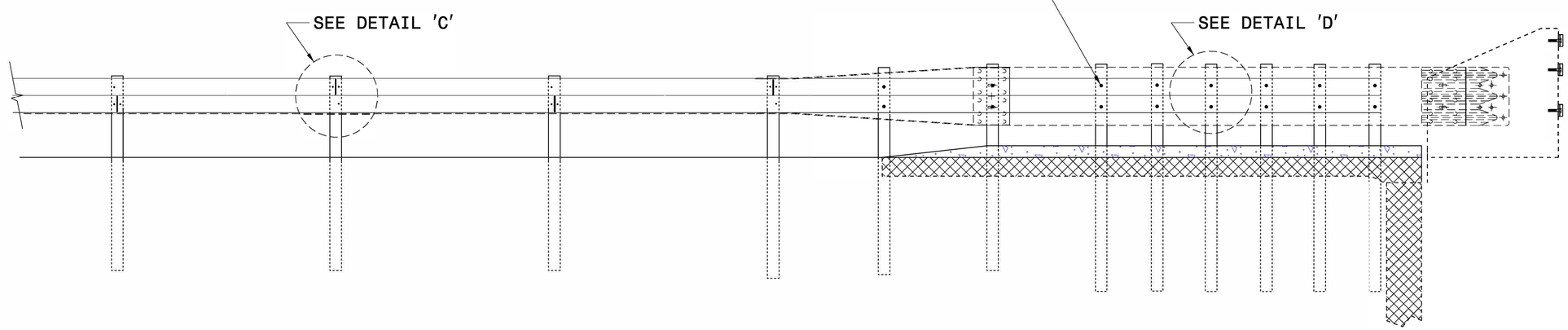

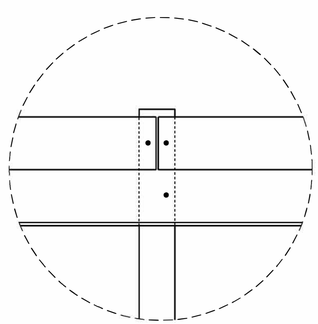

DETAIL 'C'

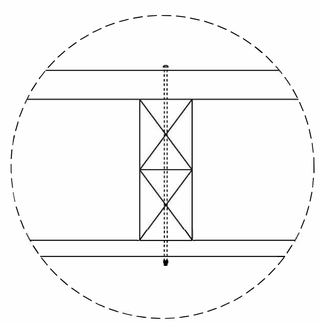

DETAIL 'D'

ELEVATION

NOTES:

1. USE #2 SYP TREATED 2 X 6 FOR WOOD RAIL.
2. USE GUARDRAIL BOLTS TO FASTEN WOOD RAIL TO GUARDRAIL POSTS. SEE ROADWAY STD.NO.862.02.
3. THE MOUNTING HEIGHT OF THE WOOD RAIL TO BE DETERMINED IN THE FIELD.
4. PLACE THE TREATED 2 X 6 WOOD RAIL AS DIRECTED BY THE ENGINEER.
5. DO NOT PLACE WOOD RAIL WITHIN THE PAY LIMITS OF THE GREU TL-3 END UNIT.

NORTH CAROLINA PROFESSIONAL SEAL 022071 ENGINEER RONALD ELTON DAVENPORT, JR.
5/31/2022

CONTRACT STANDARDS AND DEVELOPMENT UNIT
PLANS AND STANDARDS SECTION
Office 919-707-6950 FAX 919-250-4119

DETAIL OF WOOD RUB RAIL

ORIGINAL BY:	STD.8.25	DATE:	1-25-12
MODIFIED BY:		DATE:	
CHECKED BY:		DATE:	
FILE SPEC.:	jhowerton/Wood Rail on Back of Guardrail		

DOCUMENT NOT CONSIDERED FINAL UNLESS ALL SIGNATURES COMPLETED