DocuSign Envelope ID: 92CE6338-7683-4004-B5B9-A21C5A37EFBC

PROJECT REFERENCE NO.	SHEET NO.
A-0009CA	2C-7

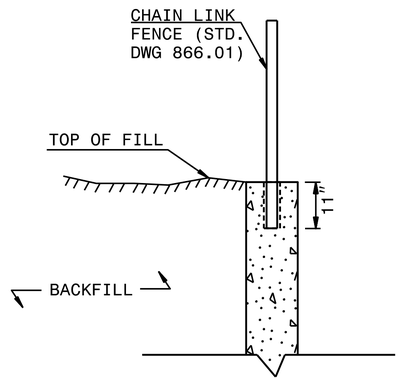

SECTION A-A
RETAINING WALL

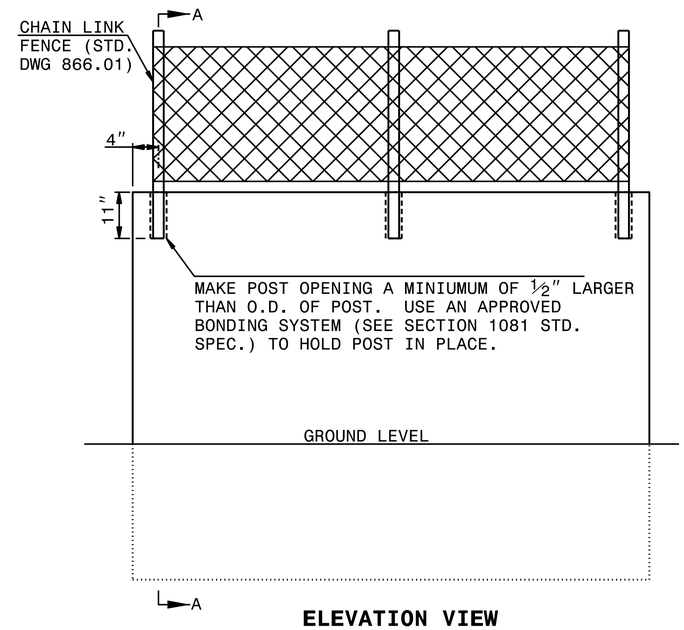

ELEVATION VIEW
OF RETAINING WALL

EMBED CHAIN LINK FENCE 11″ INTO PROPOSED WALL IN A SLEEVE OR BLOCKOUT WITH EPOXY OR CONCRETE GROUT ANCHORING SYSTEM. PRE-MEASURE AND CENTER THE PROPOSED FENCE ON TOP OF WALL FOR POST SPACINGS. IFF DRILLING THE HOLES FOR POSTS, USE A ROTARY DRILL TO DRILL HOLES IN THE CONCRETE. NO IMPACT DRILLS WILL BE ALLOWED, TO ELIMINATE ANY POSSIBILITY OF STRUCTURAL DAMAGES TO THE PROPOSED WALL.

5/31/2022

DOCUMENT NOT CONSIDERED FINAL UNLESS ALL SIGNATURES COMPLETED

CONTRACT STANDARDS AND DEVELOPMENT UNIT
Office 919-707-6950 FAX 919-250-4119

CHAIN LINK FENCE ON RETAINING WALL

ORIGINAL BY: _____ DATE: _____
MODIFIED BY: K.A. KEMPF DATE: SEP. 2017
CHECKED BY: _____ DATE: _____
FILE SPEC.: usr/detials/jhowerton/chain link on retaining wall.dgn

$$$$$SYSTIME$$$$$
$$$$$