DocuSign Envelope ID: 92CE6338-7683-4004-B5B9-A21C5A37EFBC

5/14/99

PROJECT REFERENCE NO.	SHEET NO.
A-0009CA	2C-1

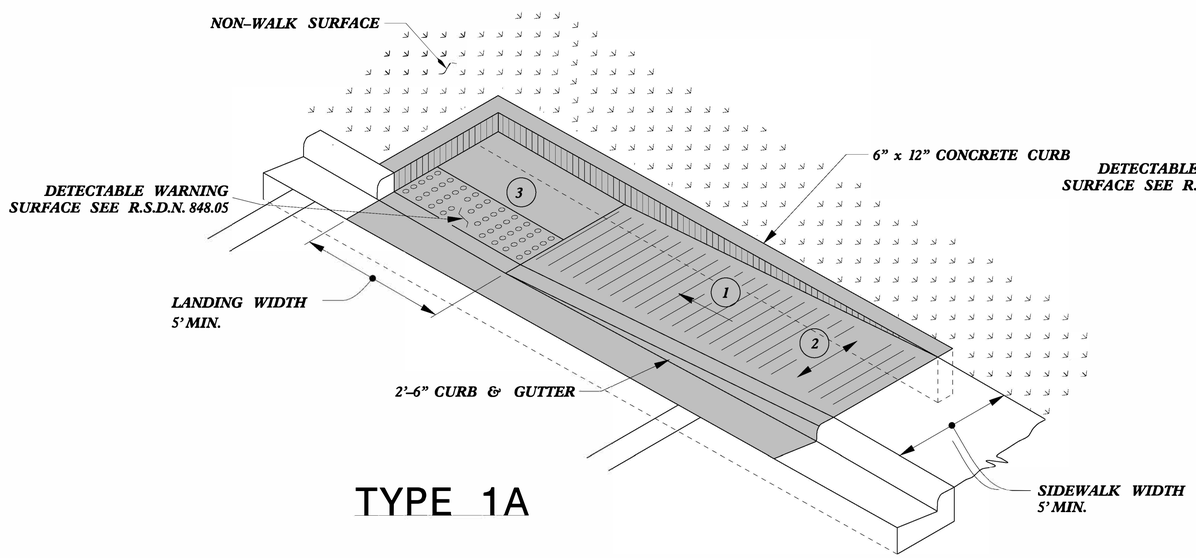

TYPE 1A

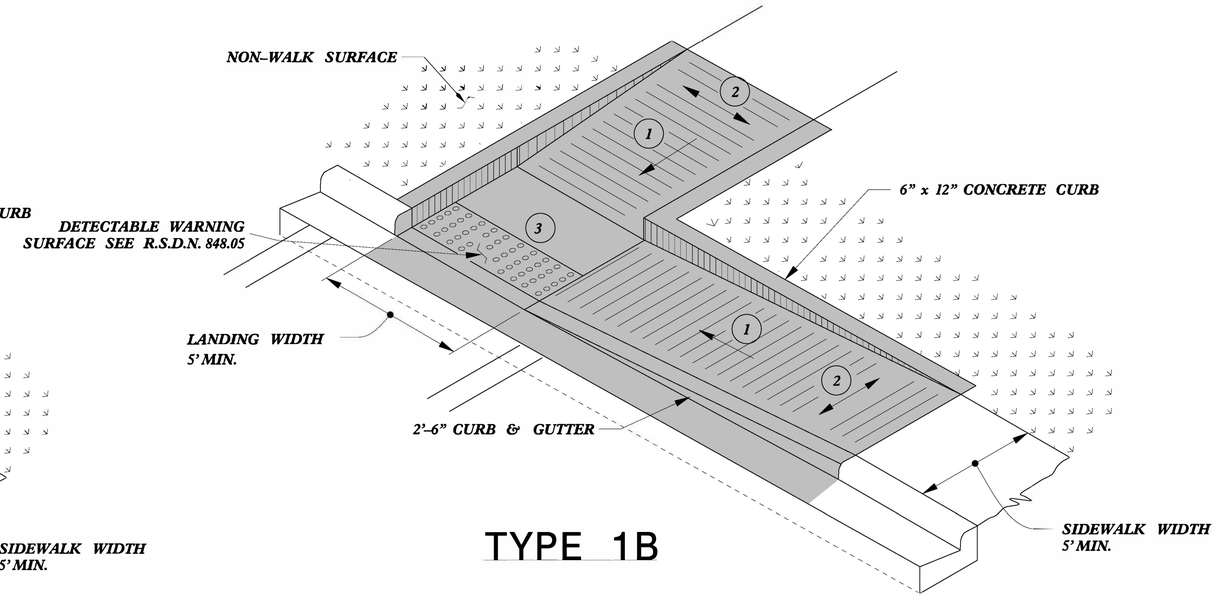

TYPE 1B

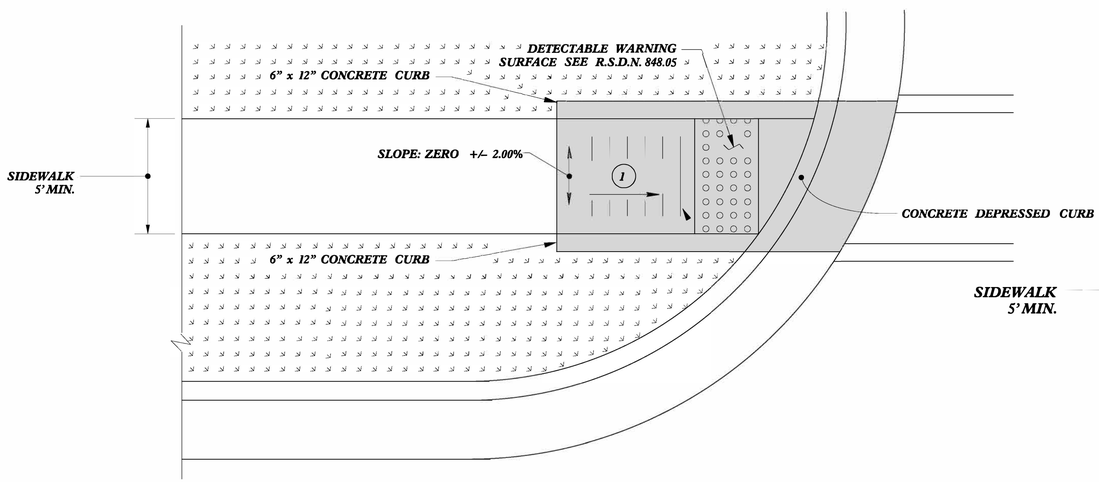

TYPE 1 Modified

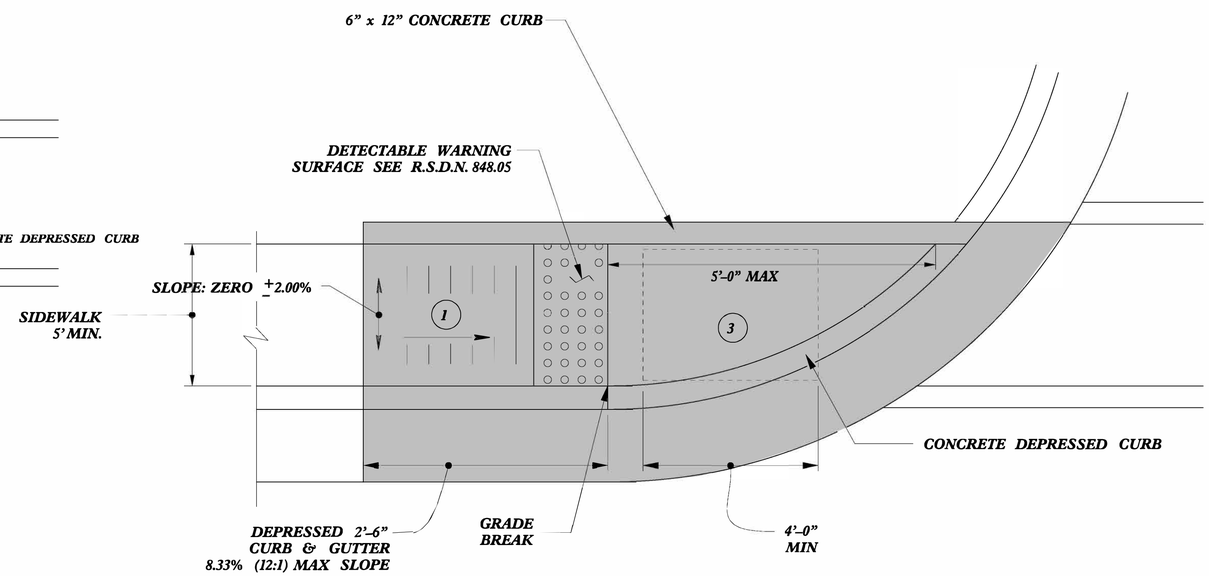

TYPE 1

1. 8.33% (12:1) MAX RAMP SLOPE
2. CROSS SLOPE: 2.00%
3. CURB RAMPS REQUIRE A (4'-0") MINIMUM LANDING WITH A MAXIMUM CROSS SLOPE AND LONGITUDINAL SLOPE OF 2.00% WHERE PEDESTRIANS PERFORM TURNING MANEUVERS. SLOPE TO DRAIN TO CURB.

PAY LIMITS FOR 1 CURB RAMP

REFER TO ROADWAY STANDARD DRAWING NUMBER 848.05 SHEET 3 OF 3 FOR ALL RAMP NOTES

NORTH CAROLINA PROFESSIONAL SEAL 022071 ENGINEER ROYALD ELTON DAVENPORT, JR.

5/31/2022

DOCUMENT NOT CONSIDERED FINAL UNLESS ALL SIGNATURES COMPLETED

CONTRACT STANDARDS AND DEVELOPMENT UNIT
Office 919-707-6950 FAX 919-250-4119

CURB RAMPS

Directional Ramps

ORIGINAL BY: J.S. HOWERTON DATE: 7/7/11
MODIFIED BY: DATE:
CHECKED BY: DATE:
FILE SPEC. :stds/2012CurbRamp/CurbRampDetails.dgn

$$$