DocuSign Envelope ID: B46E2366-D86D-439C-85F7-4DCEE2A638C1

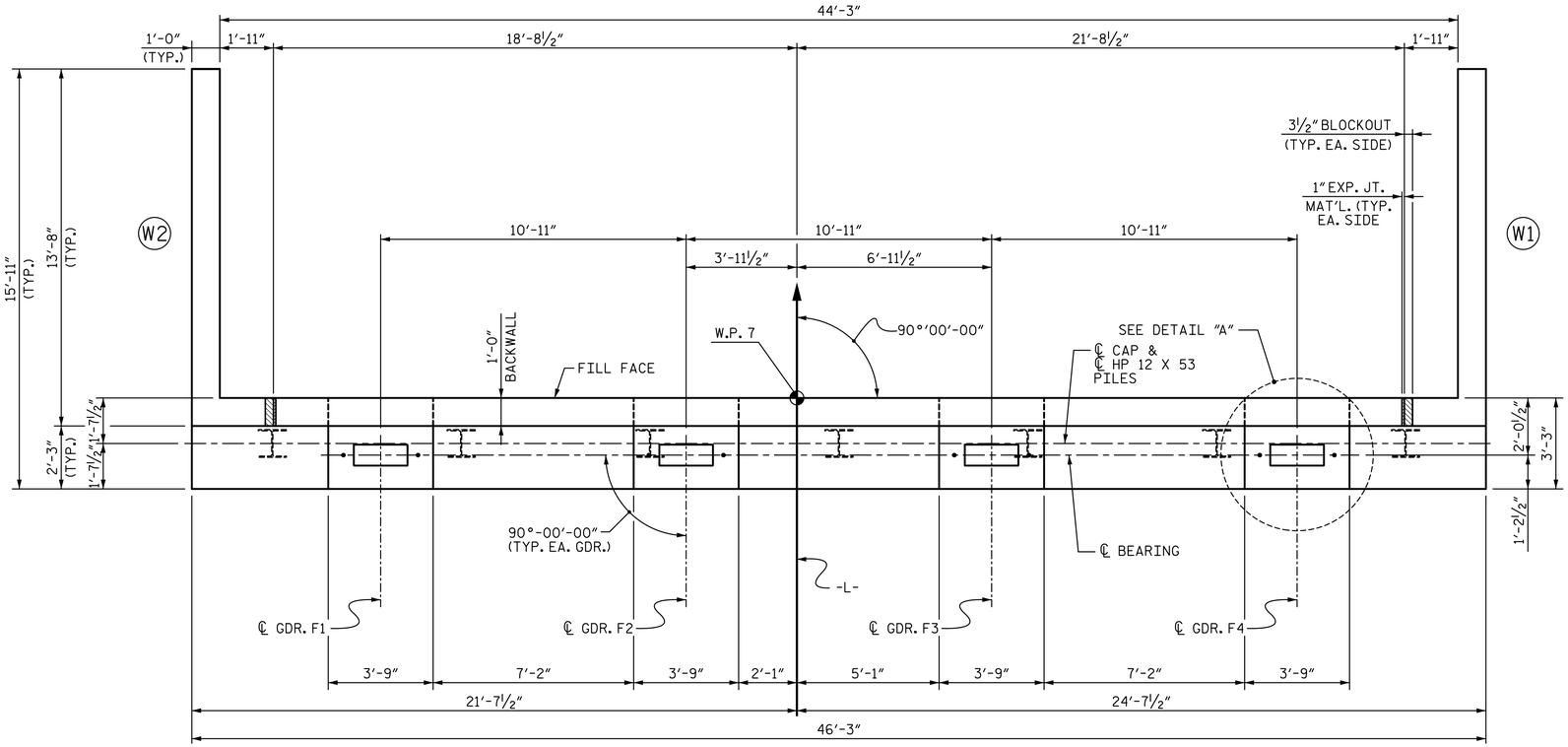

PLAN

(CONC. PILE COLLARS NOT SHOWN FOR CLARITY)

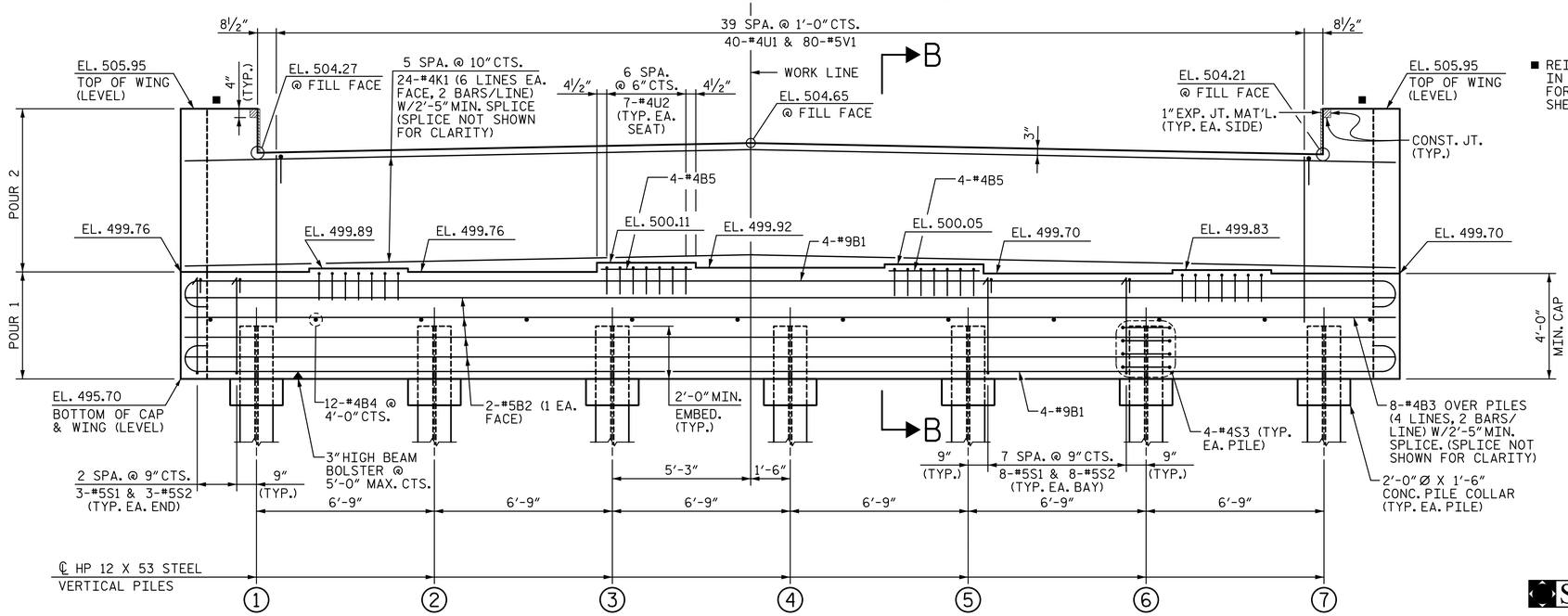

ELEVATION

(LOOKING IN THE DIRECTION OF STATIONING)

NOTES:

STIRRUPS AND "U" BARS IN CAP MAY BE SHIFTED AS NECESSARY TO CLEAR ANCHOR BOLTS.

THE TOP SURFACE AREAS OF THE END BENT CAP SHALL BE CURED IN ACCORDANCE WITH THE STANDARD SPECIFICATIONS EXCEPT THAT THE MEMBRANE CURING COMPOUND METHOD SHALL NOT BE USED.

BACKWALL SHALL BE PLACED BEFORE APPLYING THE EPOXY PROTECTIVE COATING.

THE TOP SURFACE OF THE CAP EXCEPT THE BRIDGE SEAT BUILDUPS SHALL BE SLOPED TRANSVERSELY FROM THE FILL FACE TO THE OUTSIDE FACE AT THE RATE OF 2%.

FOR OTHER NOTES, SEE "FOUNDATION LAYOUT" SHEET.

SEE "ELASTOMERIC BEARING DETAILS" SHEET FOR 2" Ø ANCHOR BOLT DETAIL.

THE CONCRETE IN THE HATCHED AREA OF THE BACKWALL SHALL BE POURED AFTER THE BARRIER RAIL IS CAST IF SLIP FORMING IS USED.

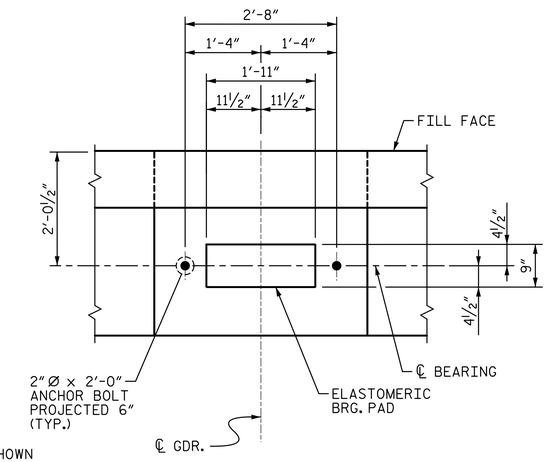

■ REINFORCING NOT SHOWN IN WING FOR CLARITY. FOR DETAILS, SEE SHEET 3 OF 4.

DETAIL "A"

(TYP. AT EACH BRIDGE SEAT)

PROJECT NO. B-5810

CABARRUS COUNTY

STATION: 23+17.00 -L-

SHEET 2 OF 4

STATE OF NORTH CAROLINA
DEPARTMENT OF TRANSPORTATION
RALEIGH

END BENT 2

NORTH CAROLINA PROFESSIONAL SEAL 029429 ENGINEER JASON T. GRISCOM
DocuSigned by: Jason Griscom E4ACDE421F244BA...
1/17/2022

STV 100 Years
STV ENGINEERS, INC.
900 West Trade St., Suite 715
Charlotte, NC 28202
NC License Number F-0991

DOCUMENT NOT CONSIDERED FINAL UNLESS ALL SIGNATURES COMPLETED

REVISIONS						SHEET NO.
NO.	BY:	DATE:	NO.	BY:	DATE:	S-28
1			3			TOTAL SHEETS
2			4			36

ASSEMBLED BY :	LGH	DATE :	6-19
CHECKED BY :	MLO	DATE :	12-19
DESIGN ENGINEER OF RECORD :	J. GRISCOM	DATE :	1-22

R:\Structures\Ustation\Finals\40L_055_B5810_SMU_E2_028_I20022.dgn 4:51:58 PM 1/6/2022 jgriscom