DocuSign Envelope ID: FE90F03D-B187-4DC2-90BE-8F9ECCF94C1D

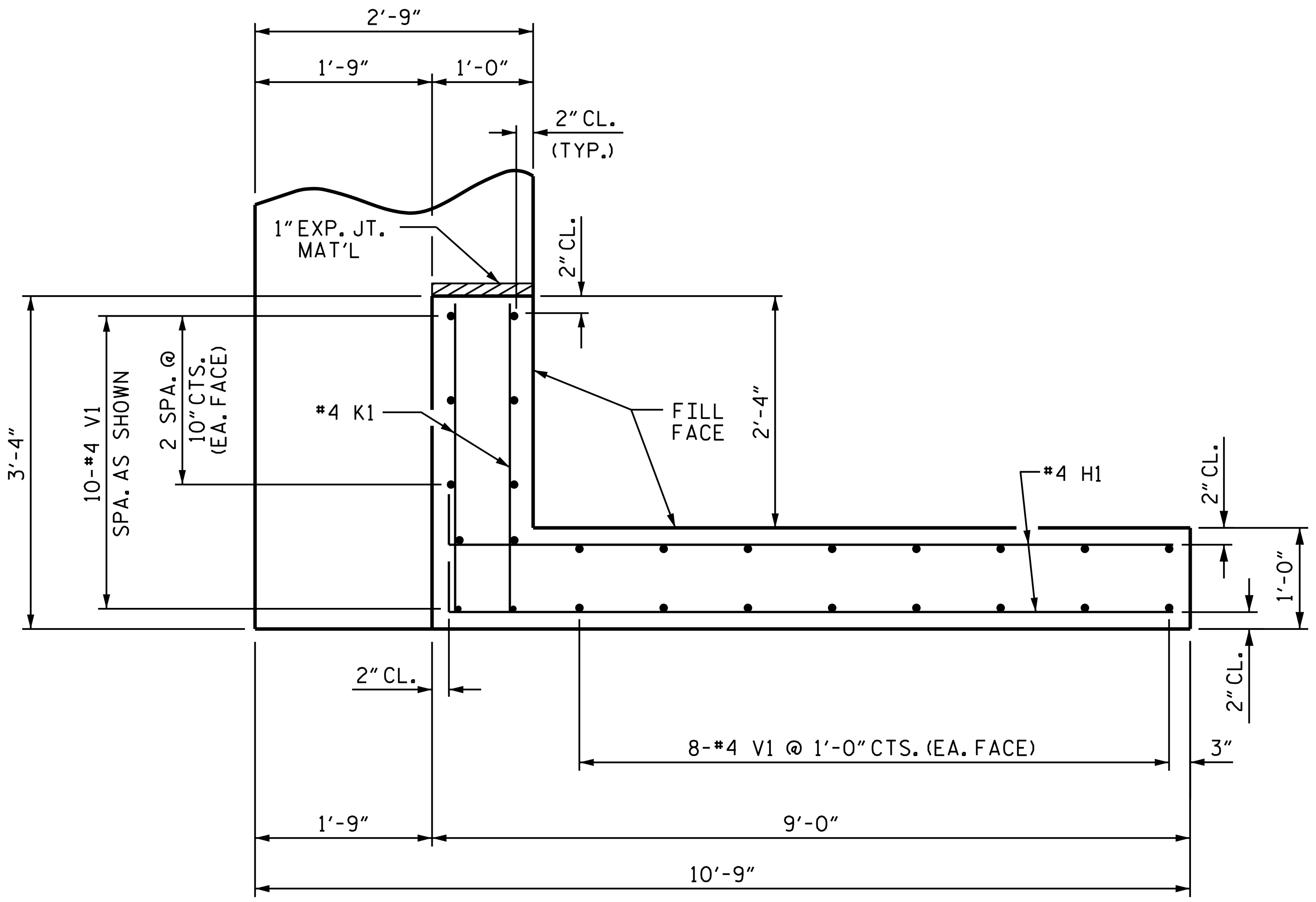

PLAN OF WING (W1)

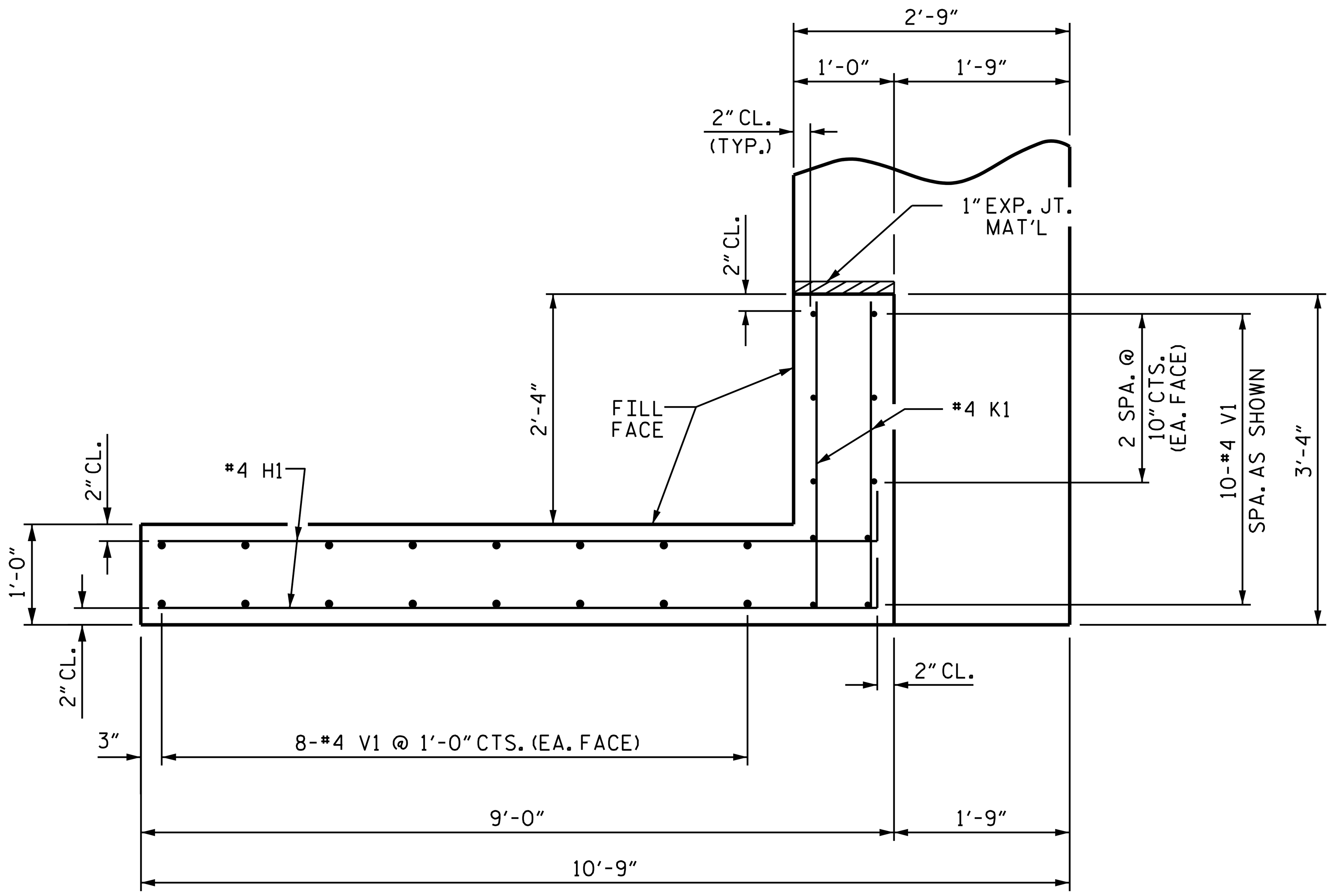

PLAN OF WING (W2)

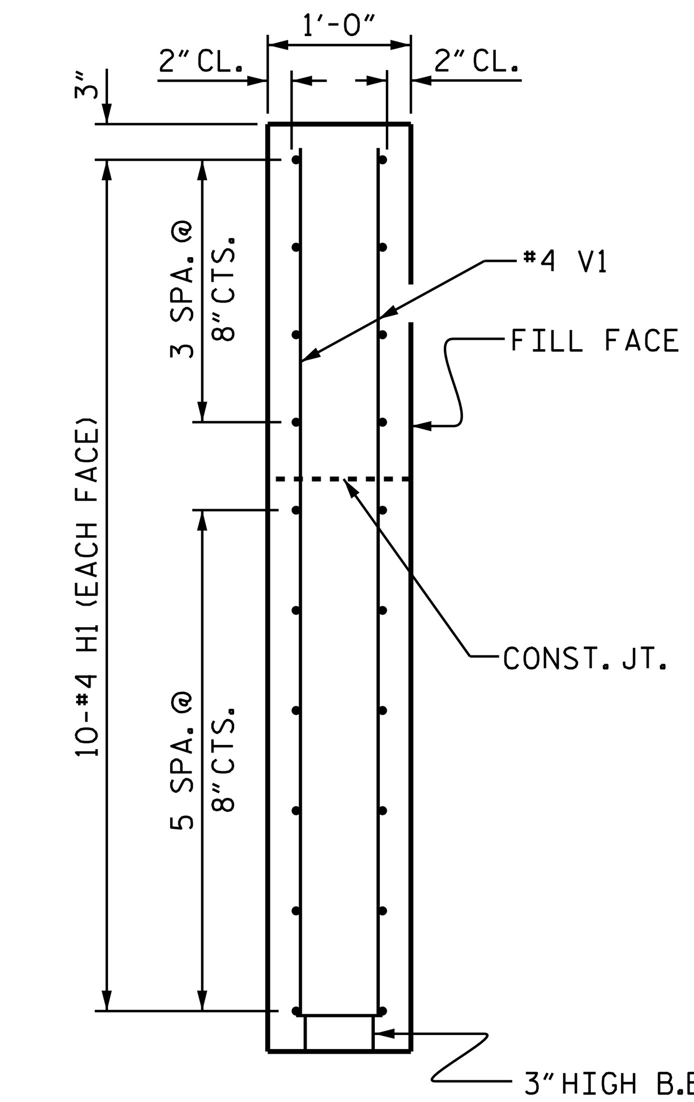

SECTION X-X

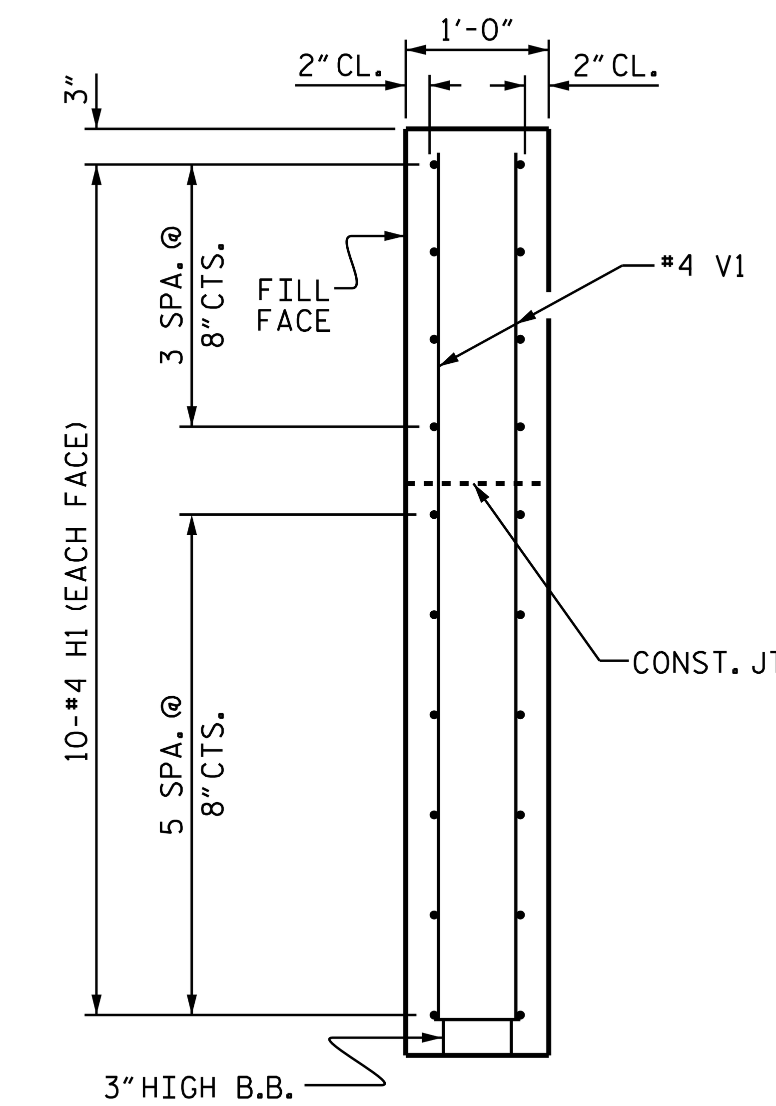

SECTION Y-Y

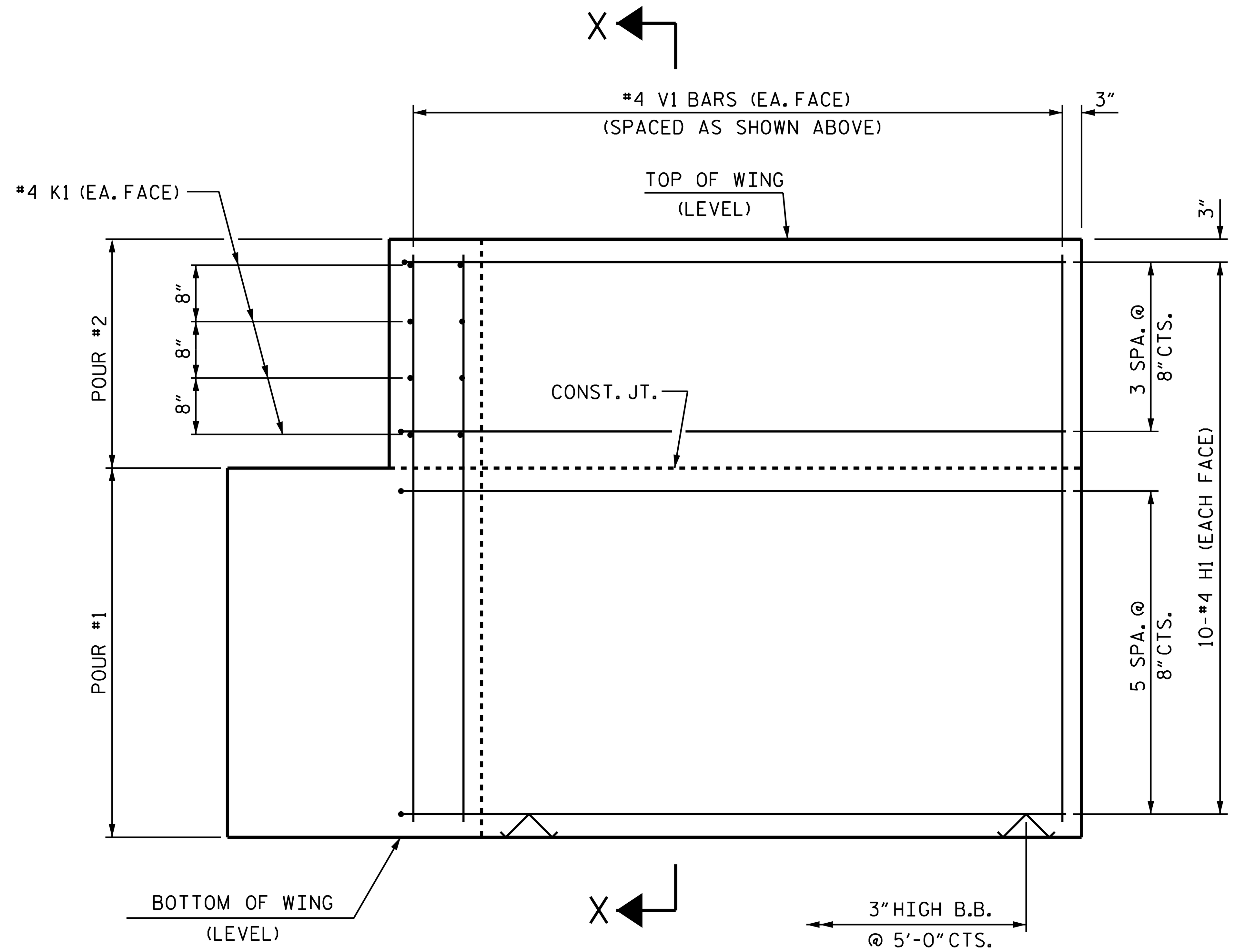

ELEVATION OF WING (W1)

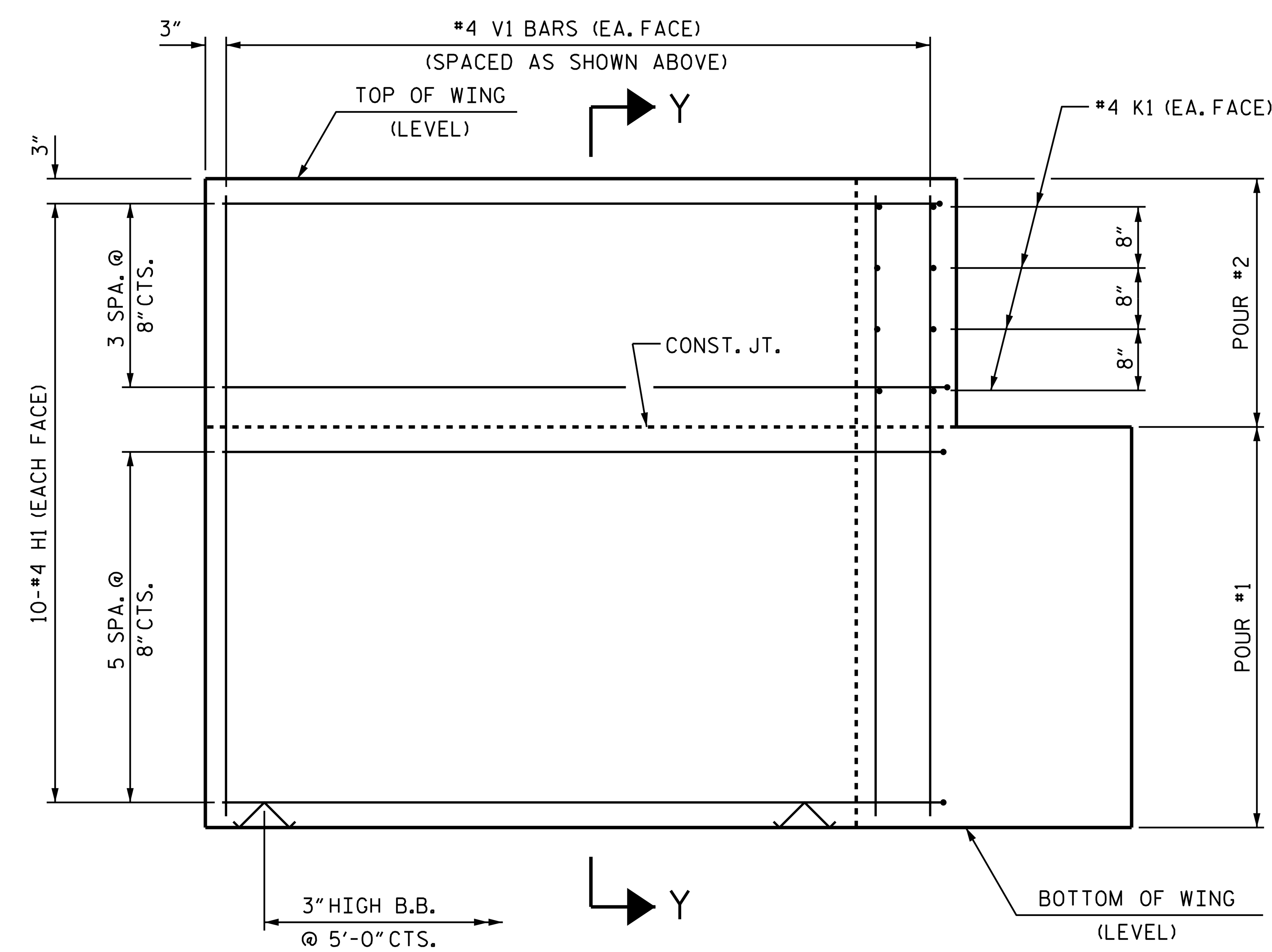

ELEVATION OF WING (W2)

WING DETAILS

PROJECT NO. BR-0109

YADKIN **COUNTY**

STATION: 28+54.00 -L-

SHEET 3 of 4

STATE OF NORTH CAROLINA
DEPARTMENT OF TRANSPORTATION
RALEIGH

SUBSTRUCTURE

END BENT
WING DETAILS

REVISIONS						SHEET NO.
NO.	BY:	DATE:	NO.	BY:	DATE:	S-11
1			3			TOTAL SHEETS
2			4			14

NORTH CAROLINA PROFESSIONAL SEAL 037031 ENGINEER LISA M SAMPLES

DocuSigned by: Lisa M. Samples 5663D099A9B449C... 5/10/2022

DOCUMENT NOT CONSIDERED FINAL UNLESS ALL SIGNATURES COMPLETED

ms consultants, inc.
5444 Wade Park Blvd.
Suite 160
Raleigh, NC 27607
NC License Number : C-3239

ASSEMBLED BY : J.M. KEPICH	DATE : 04/20
CHECKED BY : L.M. SAMPLES	DATE : 05/21
DRAWN BY : WJH 12/11	REV. 4/15 MAA/TMG
CHECKED BY : AAC 12/11	

$$$$$SYSTIME$$$$$
$$$$$$$$$$$DGN$$$$$$$$$$$$$$
$$$$USERNAME$$$$

STD. NO. EB_30_90S4