PROJECT REFERENCE NO.	SHEET NO.
Y-5500JC	EC-2

SKIMMER BASIN WITH BAFFLES DETAIL

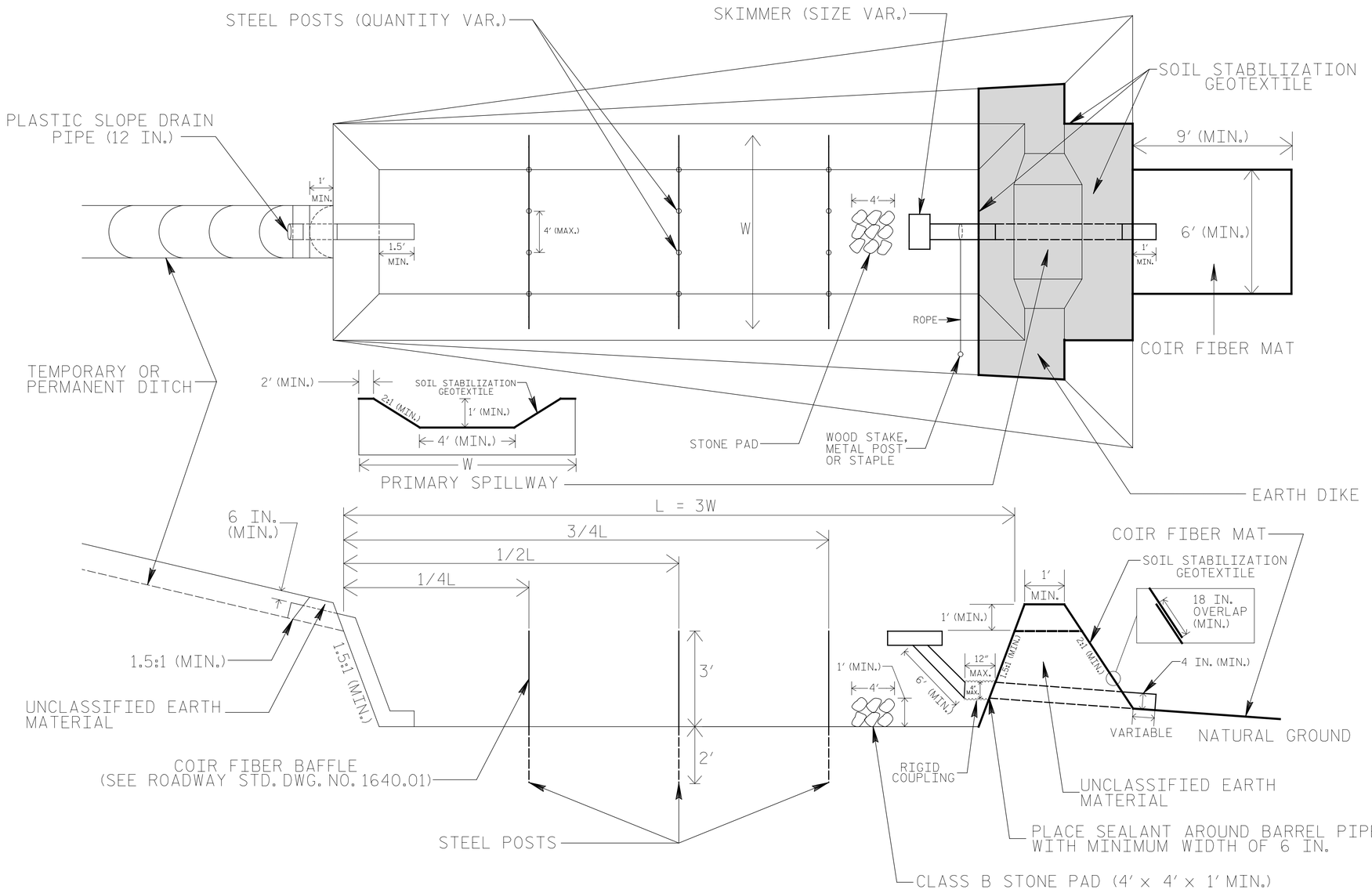

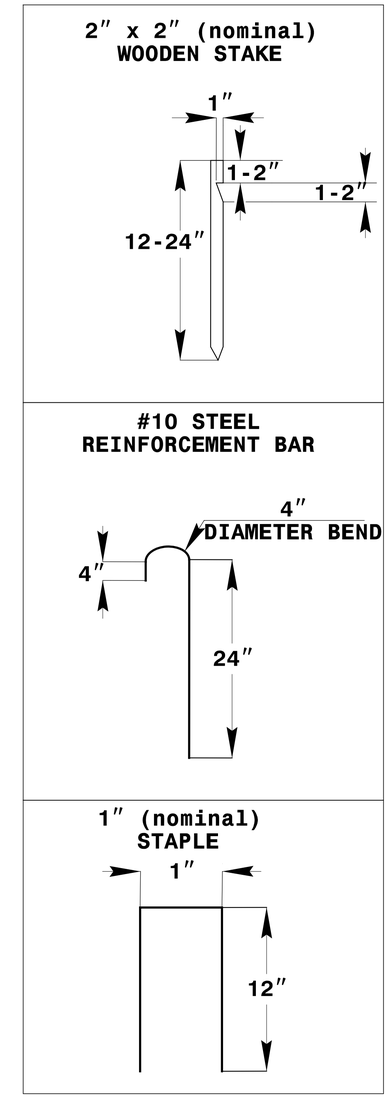

COIR FIBER MAT ANCHOR OPTIONS

NOTES

1. SEED AND PLACE MATTING FOR EROSION CONTROL ON INTERIOR AND EXTERIOR SIDESLOPES.
2. LIMIT EARTH DIKE HEIGHT TO 5 FT.
3. FOR BASIN DEPTH OF 3 FT., THE MINIMUM BASIN WIDTH SHALL BE 9 FT.
4. DETERMINE PRIMARY SPILLWAY WEIR LENGTH (FT.) USING Q/0.8, WHERE Q IS FLOW RATE (CFS) INTO BASIN.
5. PLASTIC SLOPE DRAIN PIPE AT INLET OF BASIN MAY BE REPLACED BY FILTRATION GEOTEXTILE OR TARP AS DIRECTED.
6. SOIL STABILIZATION GEOTEXTILE FOR PRIMARY SPILLWAY SHALL BE ONE CONTINUOUS PIECE OF MATERIAL OR OVERLAPPED 18 IN. (MIN.).

NOT TO SCALE

11/23/2021
R:\Erosion Control\F-14288_ec_psh02.dgn
WOTT MACDONALD