DocuSign Envelope ID: AF4D3C11-68A3-4A5E-A02E-4639B2FB8E5A

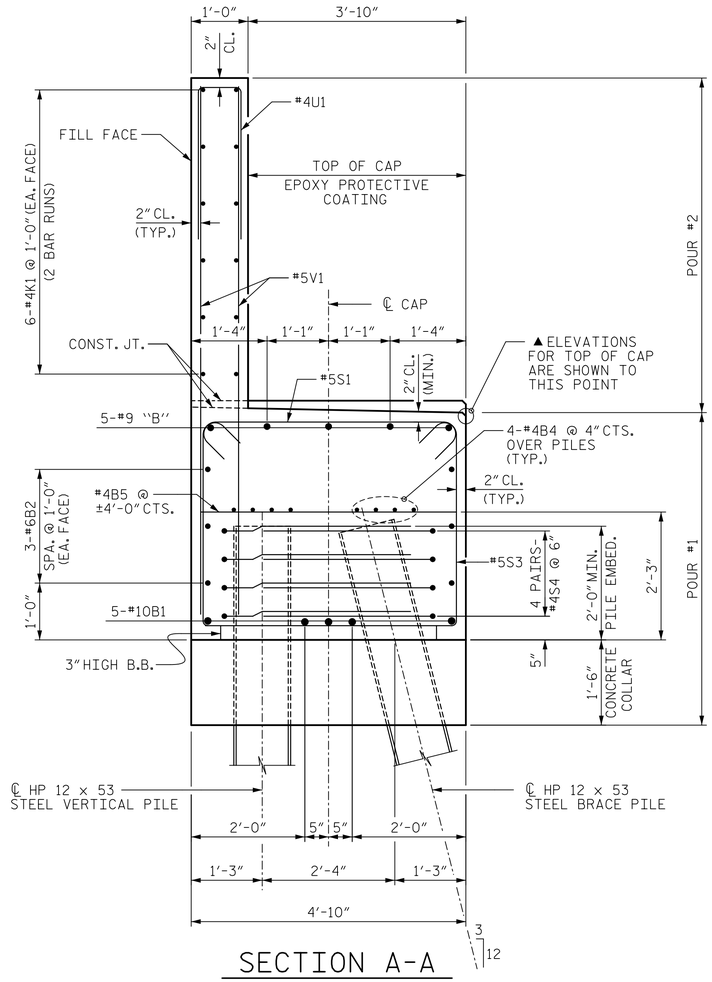

SECTION A-A

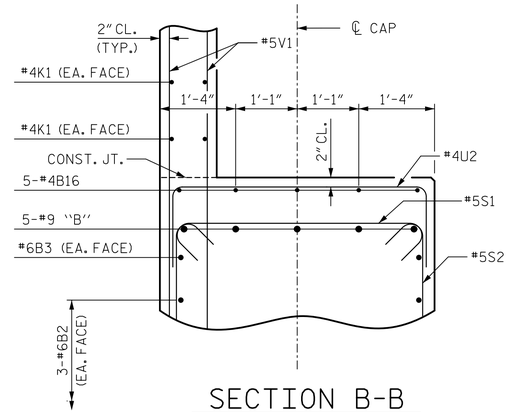

SECTION B-B

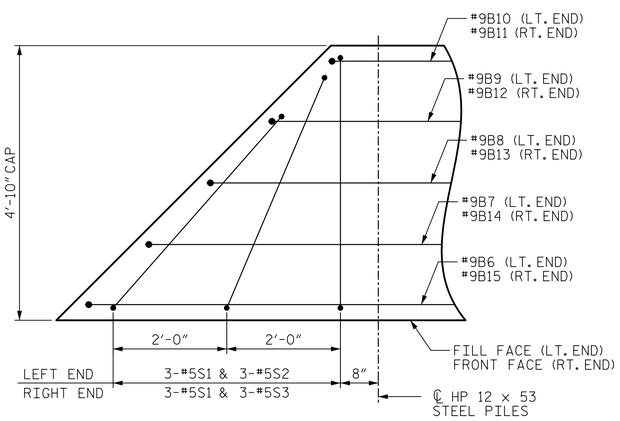

SPLAYED BAR DETAIL

PLAN VIEW SHOWN AT LEFT END, SIMILAR BY ROTATION AT RIGHT END.

BAR TYPE

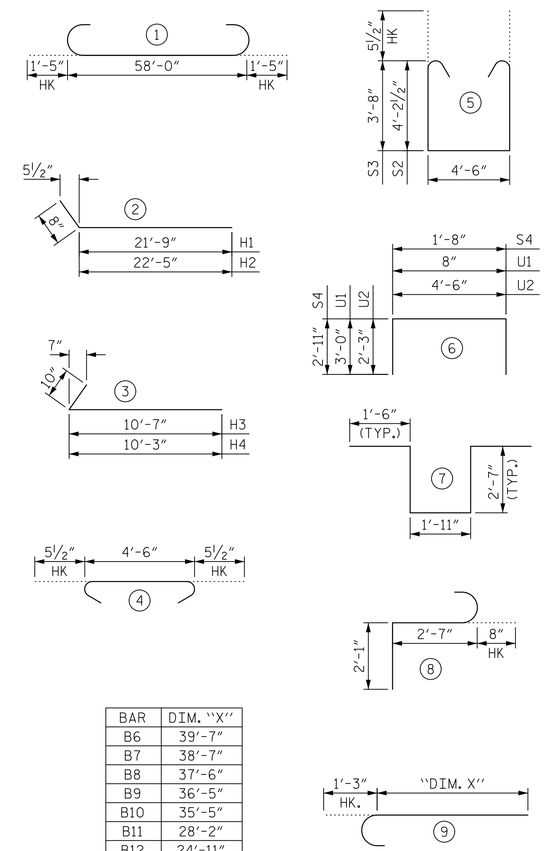

BAR	DIM. "X"
B6	39'-7"
B7	38'-7"
B8	37'-6"
B9	36'-5"
B10	35'-5"
B11	28'-2"
B12	24'-11"
B13	26'-0"
B14	27'-1"
B15	32'-4"

ALL BAR DIMENSIONS ARE OUT TO OUT.

BILL OF MATERIAL

END BENT 1

BAR	NO.	SIZE	TYPE	LENGTH	WEIGHT
B1	5	#10	1	60'-10"	1309
B2	6	#6	STR	57'-8"	520
B3	2	#6	STR	34'-3"	103
B4	16	#4	STR	30'-4"	324
B5	17	#4	STR	4'-6"	51
B6	1	#9	9	40'-10"	139
B7	1	#9	9	39'-10"	135
B8	1	#9	9	38'-9"	132
B9	1	#9	9	37'-8"	128
B10	1	#9	9	36'-8"	125
B11	1	#9	9	29'-5"	100
B12	1	#9	9	26'-2"	89
B13	1	#9	9	27'-3"	93
B14	1	#9	9	28'-4"	96
B15	1	#9	9	33'-7"	114
B16	10	#4	STR	14'-7"	97
B17	5	#4	STR	3'-5"	11
H1	17	#4	2	22'-5"	255
H2	17	#4	2	23'-1"	262
H3	23	#5	3	11'-5"	274
H4	23	#5	3	11'-1"	266
K1	24	#4	STR	30'-3"	485
K2	8	#4	STR	3'-8"	20
S1	60	#5	4	5'-5"	339
S2	39	#5	5	13'-10"	563
S3	21	#5	5	12'-9"	279
S4	56	#4	6	7'-6"	281
S5	3	#6	7	10'-1"	45
S6	3	#6	8	5'-4"	24
U1	50	#4	6	6'-8"	223
U2	18	#4	6	9'-0"	108
V1	100	#5	STR	9'-0"	939
V2	54	#5	STR	12'-0"	676
V3	30	#5	STR	10'-7"	331

REINFORCING STEEL 8936 LBS.

CLASS A CONCRETE

POUR #1 (CAP, COLLARS & LOWER WINGWALLS) 57.7 C.Y.

POUR #2 (BACKWALL & UPPER WINGWALL) 21.0 C.Y.

TOTAL = 78.7 C.Y.

HP 12x53 STEEL PILES:

NO. = 15 LIN. FT. = 615

PILE DRIVING EQUIPMENT SETUP FOR HP 12x53 STEEL PILES 15 EA.

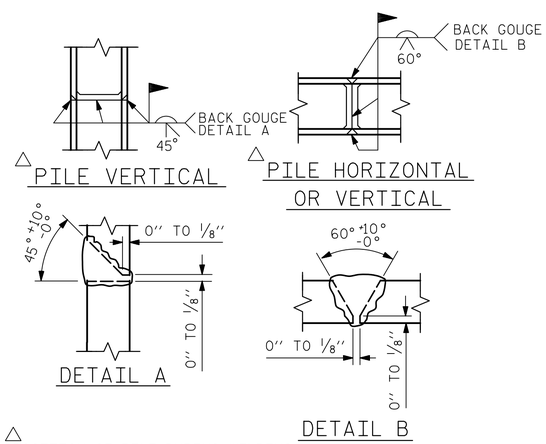

△ POSITION OF PILE DURING WELDING.

PILE SPLICE DETAILS

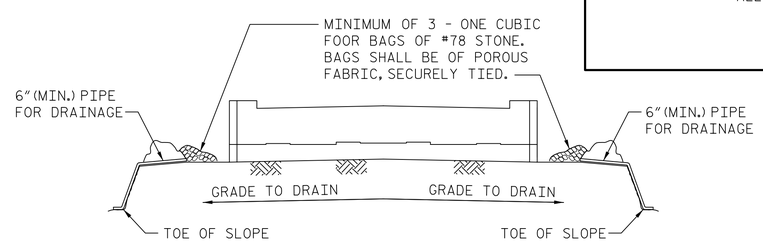

BAGGED STONE AND PIPE SHALL BE PLACED IMMEDIATELY AFTER COMPLETION OF END BENT EXCAVATION. PIPE MAY BE EITHER CONCRETE, CORRUGATED STEEL, CORRUGATED ALUMINUM ALLOY, OR CORRUGATED PLASTIC. PERFORATED PIPE WILL NOT BE ALLOWED.

BAGGED STONE SHALL REMAIN IN PLACE UNTIL THE ENGINEER DIRECTS THAT IT BE REMOVED. THE CONTRACTOR SHALL REMOVE AND DISPOSE OF SILT ACCUMULATIONS AT BAGGED STONE WHEN SO DIRECTED BY THE ENGINEER. BAGS SHALL BE REMOVED AND REPLACED WHENEVER THE ENGINEER DETERMINES THAT THEY HAVE DETERIORATED AND LOST THEIR EFFECTIVENESS.

NO SEPARATE PAYMENT WILL BE MADE FOR THIS WORK AND THE ENTIRE COST OF THIS WORK SHALL BE INCLUDED IN THE UNIT CONTRACT PRICE FOR THE SEVERAL PAY ITEMS.

TEMPORARY DRAINAGE AT END BENT

PROJECT NO. BR-0044
ROCKINGHAM COUNTY
STATION: 21+97.00 -L-

SHEET 3 OF 3

DRAWN BY : D.R. DRUM DATE : 10/2019
CHECKED BY : G.R. COLS DATE : 10/2019
DESIGNED BY : H.T. ROSEMOND DATE : 10/2019
DESIGN CHECKED BY : S. NATARAJAN DATE : 10/2019

DOCUMENT NOT CONSIDERED FINAL UNLESS ALL SIGNATURES COMPLETED

AECOM
AECOM TECHNICAL SERVICES OF NC, INC.
5438 WADE PARK BOULVEVARD, SUITE 200
RALEIGH, NC 27607
(919) 854-6200 www.aecom.com
AECOM License No. F-0342

NORTH CAROLINA PROFESSIONAL SEAL 041343 ENGINEER GREGORY R. COLS
Docusigned by:
18DCF0C4B0B0400...
5/16/2022

STATE OF NORTH CAROLINA
DEPARTMENT OF TRANSPORTATION
RALEIGH

SUBSTRUCTURE

END BENT 1

REVISIONS						SHEET NO.
NO.	BY:	DATE:	NO.	BY:	DATE:	S-30
1			3			TOTAL SHEETS
2			4			39

DATE: 3/29/2022
TIME: 2:25:42 PM
USER: Benjamin.D.Hodock
DGN: R:\Structures\04_Drawings\40_0059_BR0044_SMU_E103.dgn