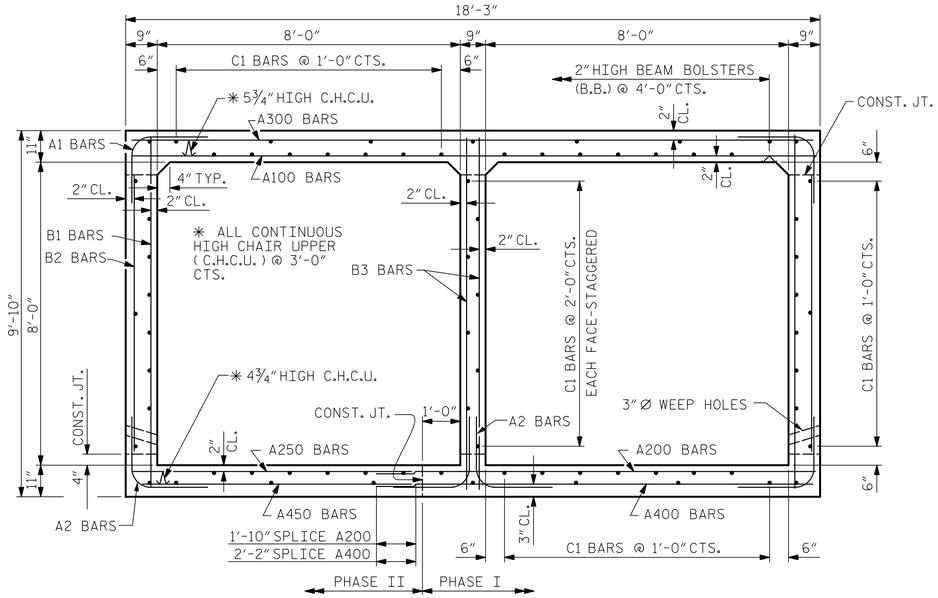

RIGHT ANGLE SECTION OF BARREL

THERE ARE 72 "C" BARS IN SECTION OF BARREL.
(LOOKING DOWNSTREAM)

STAGE II (LEFT) BAR SCHEDULE

BAR	NO.	SIZE	TYPE	LENGTH	WEIGHT
A100	91	#4	STR	17'-11"	1089
A101	2	#4	STR	16'-11"	23
A102	2	#4	STR	15'-8"	21
A103	2	#4	STR	14'-5"	19
A104	2	#4	STR	13'-2"	18
A105	2	#4	STR	11'-11"	16
A106	2	#4	STR	10'-7"	14
A107	2	#4	STR	9'-4"	12
A108	2	#4	STR	8'-1"	11
A109	2	#4	STR	6'-10"	9
A110	2	#4	STR	5'-7"	7
A111	2	#4	STR	4'-4"	6
A112	2	#4	STR	3'-0"	4
A200	95	#4	STR	12'-5"	788
A201	1	#4	STR	11'-4"	8
A202	1	#4	STR	10'-1"	7
A203	1	#4	STR	8'-10"	6
A204	1	#4	STR	7'-7"	5
A205	1	#4	STR	6'-4"	4
A206	1	#4	STR	5'-0"	3
A207	1	#4	STR	3'-9"	3
A208	1	#4	STR	11-11"	8
A209	1	#4	STR	10'-7"	7
A210	1	#4	STR	9'-4"	6
A211	1	#4	STR	8'-1"	5
A212	1	#4	STR	6'-10"	5
A213	1	#4	STR	5'-7"	4
A214	1	#4	STR	4'-4"	3
A215	1	#4	STR	3'-0"	2

BAR	NO.	SIZE	TYPE	LENGTH	WEIGHT
A250	99	#4	STR	7'-6"	496
A251	1	#4	STR	6'-10"	5
A252	1	#4	STR	5'-7"	4
A253	1	#4	STR	4'-4"	3
A254	1	#4	STR	3'-0"	2
A255	1	#4	STR	6'-7"	4
A256	1	#4	STR	5'-4"	4
A257	1	#4	STR	4'-1"	3
A258	1	#4	STR	2'-10"	2
A300	103	#5	STR	17'-11"	1925
A301	2	#5	STR	17'-3"	36
A302	2	#5	STR	16'-2"	34
A303	2	#5	STR	15'-1"	31
A304	2	#5	STR	13'-11"	29
A305	2	#5	STR	12'-10"	27
A306	2	#5	STR	11'-9"	25
A307	2	#5	STR	10'-7"	22
A308	2	#5	STR	9'-6"	20
A309	2	#5	STR	8'-5"	18
A310	2	#5	STR	7'-4"	15
A311	2	#5	STR	6'-2"	13
A312	2	#5	STR	5'-1"	11
A313	2	#5	STR	4'-0"	8
A314	2	#5	STR	2'-10"	6

BAR	NO.	SIZE	TYPE	LENGTH	WEIGHT
A400	108	#5	STR	12'-8"	1427
A401	1	#5	STR	11'-11"	12
A402	1	#5	STR	10'-10"	11
A403	1	#5	STR	9'-9"	10
A404	1	#5	STR	8'-7"	9
A405	1	#5	STR	7'-6"	8
A406	1	#5	STR	6'-5"	7
A407	1	#5	STR	5'-3"	5
A408	1	#5	STR	4'-2"	4
A409	1	#5	STR	11'-9"	12
A410	1	#5	STR	10'-7"	11
A411	1	#5	STR	9'-6"	10
A412	1	#5	STR	8'-5"	9
A413	1	#5	STR	7'-4"	8
A414	1	#5	STR	6'-2"	6
A415	1	#5	STR	5'-1"	5
A416	1	#5	STR	4'-0"	4
A417	1	#5	STR	2'-10"	3
A450	112	#5	STR	7'-6"	876
A451	1	#5	STR	7'-4"	8
A452	1	#5	STR	5'-1"	5
A453	1	#5	STR	4'-0"	4
A454	1	#5	STR	2'-10"	3
A455	1	#5	STR	6'-11"	7
A456	1	#5	STR	5'-10"	6
A457	1	#5	STR	4'-8"	5
A458	1	#5	STR	3'-7"	4
A459	1	#5	STR	2'-6"	3

BAR	NO.	SIZE	TYPE	LENGTH	WEIGHT
A1	238	#4	1	6'-0"	954
A2	378	#4	1	5'-7"	1410
B1	140	#4	STR	9'-4"	873
B2	238	#4	STR	7'-4"	1166
B3	140	#4	STR	9'-4"	873
C1	144	#4	STR	35'-8"	3431
S2	9	#6	STR	14'-7"	197
S3	9	#6	STR	8'-5"	114
S4	9	#6	STR	20'-3"	274
G1	4	#5	STR	20'-3"	84
D1	38	#6	STR	2'-6"	143
D2	6	#6	STR	1'-6"	14

REINFORCING STEEL 16,871 LBS

STAGE II (LEFT) QUANTITIES

CLASS A CONCRETE		
BARREL @ 1.91 CY/FT	133.2	C.Y.
WINGS, ETC.	22.8	C.Y.
2 EDGE BEAMS	1.5	C.Y.
SILLS	0.6	C.Y.
TOTAL	158.1	C.Y.
REINFORCING STEEL		
BARREL & SILLS	16,871	LBS.
WINGS, ETC.	1,231	LBS.
TOTAL	18,102	LBS.
CULVERT EXCAVATION	LUMP SUM	
FOUNDATION COND. MAT'L.	110	TONS
FOUNDATION COND. GEOTEXTILE	380	SQ. YDS.

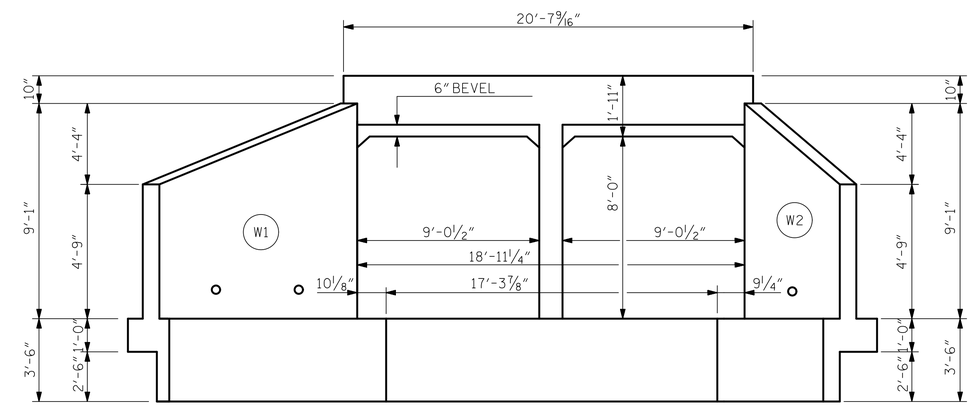

END ELEVATION NORMAL TO SKEW

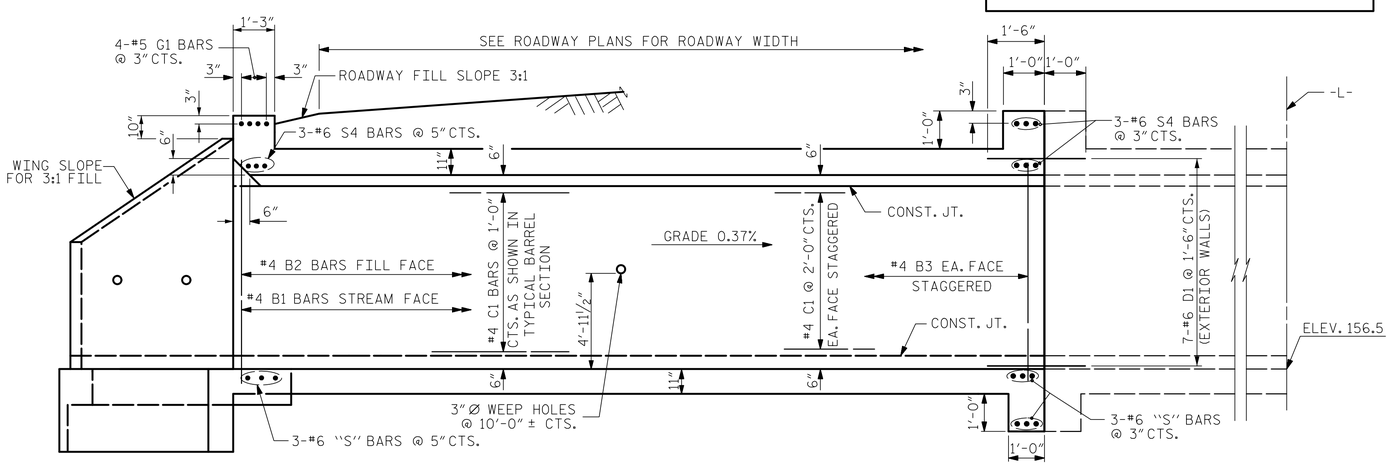

EXTERIOR WALL INTERIOR WALL

STAGE II (LEFT) - CULVERT SECTION NORMAL TO ROADWAY

BAR TYPE

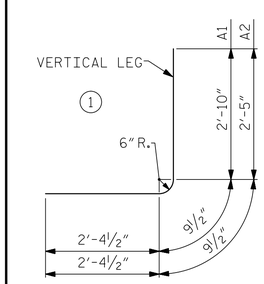

DIMENSIONS ARE OUT TO OUT

SPLICE LENGTHS CHART

BAR	SIZE	SPLICE LENGTH
B1	#4	1'-10"
C1	#4	1'-10"
A200	#4	1'-10"
A400	#5	2'-2"
"S"	#6	2'-9"

PROJECT NO. I-5987B
ROBESON COUNTY
STATION: 677+13.20 -L-

SHEET 6 OF 13

NORTH CAROLINA PROFESSIONAL SEAL 20125 ENGINEER MARCELLUS G. CHECK, JR.
DocuSigned by: Marcellus G. Check, Jr.
5FBCC2F3A4DC413...
4/12/2022 | 10:34 AM EDT

DOCUMENT NOT CONSIDERED FINAL UNLESS ALL SIGNATURES COMPLETED

TGS ENGINEERS
706 HILLSBOROUGH STREET
SUITE 200
RALEIGH, NC 27603
PH (919) 773-8887
CORP. LICENSE NO.: C-0275

STATE OF NORTH CAROLINA
DEPARTMENT OF TRANSPORTATION
RALEIGH

DOUBLE 8 FT. X 8 FT. CONCRETE BOX CULVERT STAGE II (LEFT)

REVISIONS						
NO.	BY:	DATE:	NO.	BY:	DATE:	
1			3			
2			4			

SHEET NO. C15-6
TOTAL SHEETS 13

DRAWN BY :	ZCS	DATE :	9/21
CHECKED BY :	MGC	DATE :	10/21
DESIGN ENGINEER OF RECORD:	ZCS	DATE :	10/21

3/16/2022
X:\NCDOT\I-5987B\Structures\Site 15 - 677 + 13.20 -L-\Final Plans\DGNs\411_011_I-5987B_Site 15_SMU_CU_006.dgn
User:ZSmith

FILE NAME: 411_011_I-5987B_Site 15_SMU_CU_006.dgn

SITE 15