DocuSign Envelope ID: 4A1974C9-82B6-4EFD-82D7-40F3269ED9DD

3/18/2022 11:06:43 AM G:\Projects\2020\Division 6 (Mott Mac - NV5)\I-5987B\Structures\Site 9 (L over Little Marsh Swamp)\Drawings\Final\I5987B_SMU_E1_770164.dgn

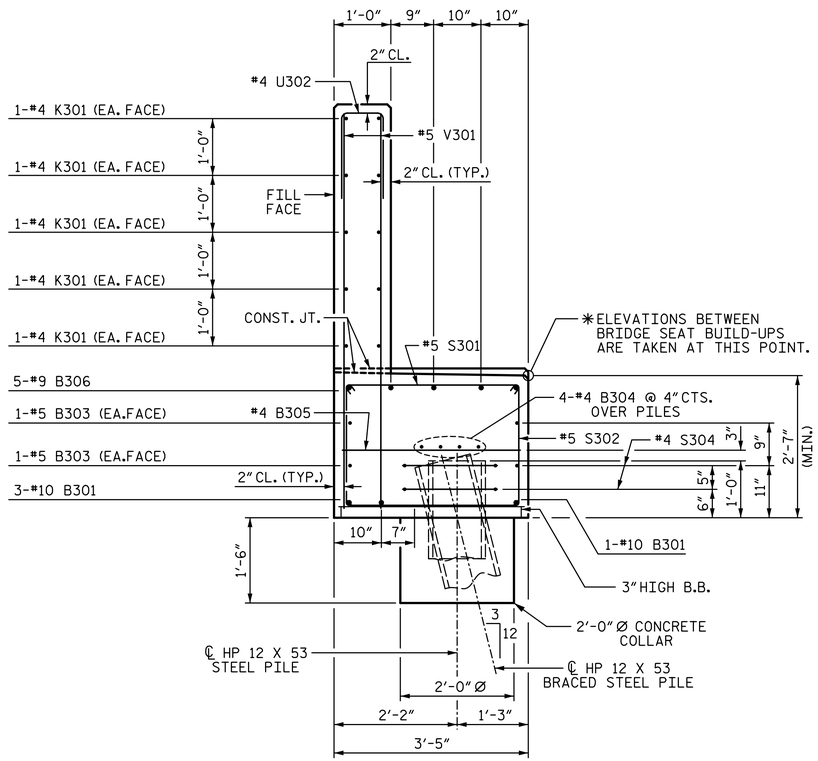

SECTION A3-A3

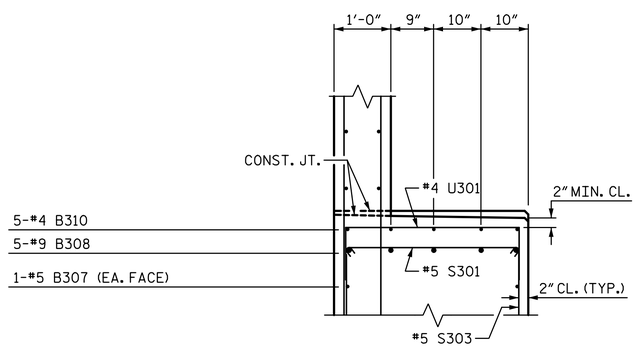

PART SECTION B3-B3

BAR TYPES

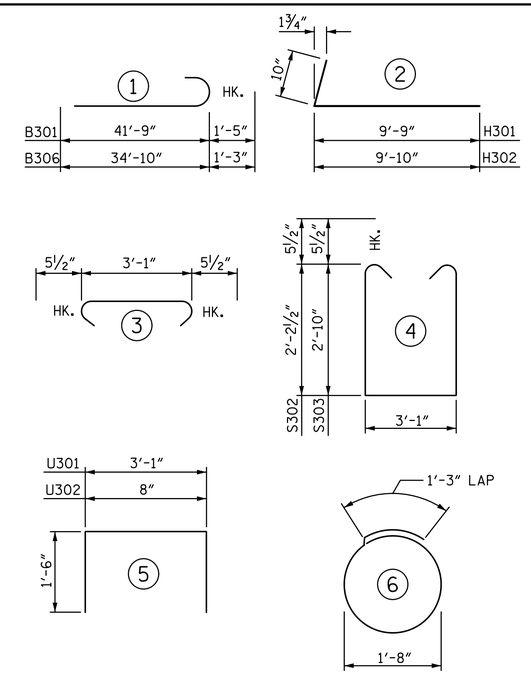

ALL BAR DIMENSIONS ARE OUT TO OUT

BILL OF MATERIAL

END BENT 1 - STAGE III

BAR	NO.	SIZE	TYPE	LENGTH	WEIGHT
B301	4	#10	1	43'-2"	743
B302	4	#10	STR	41'-9"	719
B303	8	#5	STR	40'-11"	341
B304	12	#4	STR	28'-0"	224
B305	22	#4	STR	3'-1"	45
B306	5	#9	1	36'-1"	613
B307	2	#5	STR	49'-5"	103
B308	5	#9	STR	52'-3"	888
B309	15	#4	STR	11'-1"	111
B310	5	#4	STR	4'-4"	14
H301	12	#5	2	10'-7"	132
H302	12	#5	2	10'-8"	134
K301	30	#4	STR	28'-0"	561
K302	4	#4	STR	2'-7"	7
S301	72	#5	3	4'-0"	300
S302	24	#5	4	8'-5"	211
S303	48	#5	4	9'-8"	484
S304	26	#4	6	6'-6"	113
U301	28	#4	5	6'-1"	114
U302	76	#4	5	3'-8"	186
V301	152	#5	STR	6'-9"	1070
V302	30	#5	STR	8'-1"	253
TOTAL REINFORCING STEEL					7366 LB

CLASS A CONCRETE BREAKDOWN	
POUR 1	
(CAP, COLLARS & LOWER WING)	35.3 CY
POUR 2	
(BACKWALL & UPPER WING)	15.6 CY
TOTAL CLASS A CONCRETE	50.9 CY

PROJECT NO. I-5987B

ROBESON COUNTY

STATION: 803+15.00 -L-

SHEET 8 OF 8

STATE OF NORTH CAROLINA
DEPARTMENT OF TRANSPORTATION
RALEIGH

SUBSTRUCTURE

END BENT 1

STAGE III

WGI
5640 Dillard Drive, Suite 200
Cary, NC 27518
LICENSURE NO. C-4434

NORTH CAROLINA PROFESSIONAL SEAL 18056 ENGINEER JOHN A. BATTS
3/21/2022

DOCUMENT NOT CONSIDERED FINAL UNLESS ALL SIGNATURES COMPLETED

REVISIONS						
NO.	BY:	DATE:	NO.	BY:	DATE:	
1			3			
2			4			

SHEET NO. S9-50

TOTAL SHEETS 69

DRAWN BY:	S.D. COOPER	DATE:	3-22
CHECKED BY:	J.A. BATTS	DATE:	3-22
DESIGN ENGINEER OF RECORD:	J.A. BATTS	DATE:	3-22