DocuSign Envelope ID: F06D1B07-D9E9-43E8-B38B-69EB1A15A91F

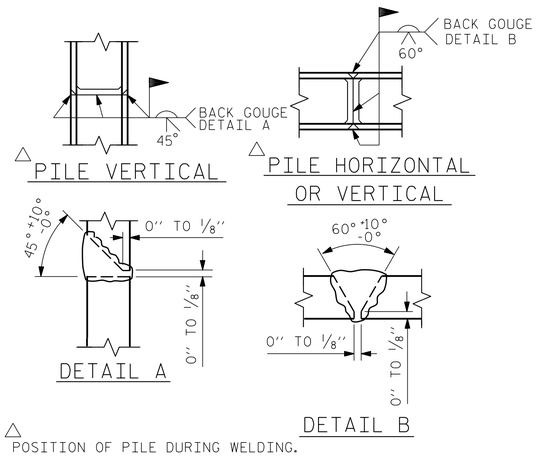

△ POSITION OF PILE DURING WELDING.

PILE SPLICE DETAILS

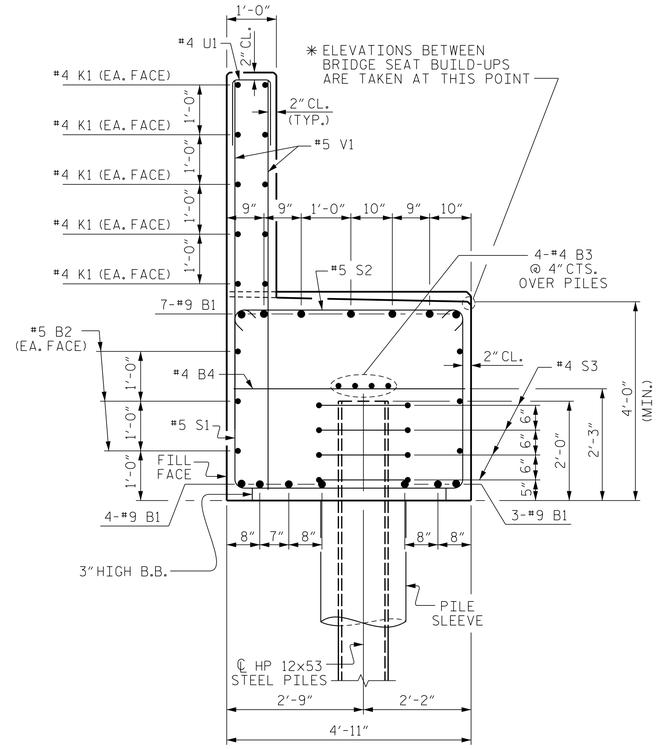

SECTION A-A

BAR TYPES

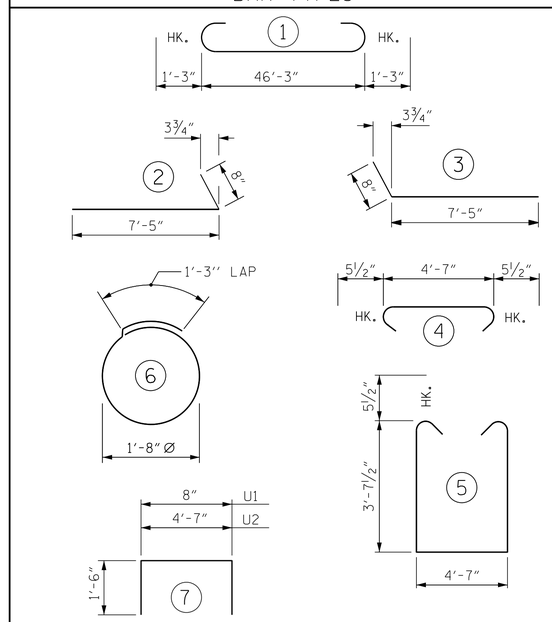

ALL BAR DIMENSIONS ARE OUT TO OUT.

BILL OF MATERIAL

END BENT No. 2

BAR	NO.	SIZE	TYPE	LENGTH	WEIGHT
B1	14	#9	1	48'-9"	2,321
B2	6	#5	STR	46'-5"	290
B3	8	#4	STR	24'-5"	130
B4	12	#4	STR	4'-7"	37
B5	7	#4	STR	15'-1"	71
H1	22	#4	2	8'-1"	119
H2	22	#4	3	8'-1"	119
K1	20	#4	STR	24'-5"	326
K2	8	#4	STR	4'-0"	21
S1	58	#5	5	12'-9"	771
S2	58	#5	4	5'-6"	333
S3	32	#4	6	6'-6"	139
U1	38	#4	7	3'-8"	93
U2	10	#4	7	7'-7"	51
V1	76	#5	STR	8'-1"	641
V2	26	#4	STR	9'-8"	168
V3	26	#4	STR	9'-8"	168

REINFORCING STEEL 5,798 LBS.

CLASS A CONCRETE BREAKDOWN

POUR #1 CAP & LOWER PART OF WINGS 35.8 C.Y.

POUR #2 BACKWALL AND UPPER PART OF WINGS 11.3 C.Y.

TOTAL CLASS A CONCRETE 47.1 C.Y.

HP 12 X 53 STEEL PILES

NO: 8 680 L.F.

PILE DRIVING EQUIPMENT SETUP FOR HP 12 X 53 STEEL PILES 8 EA.

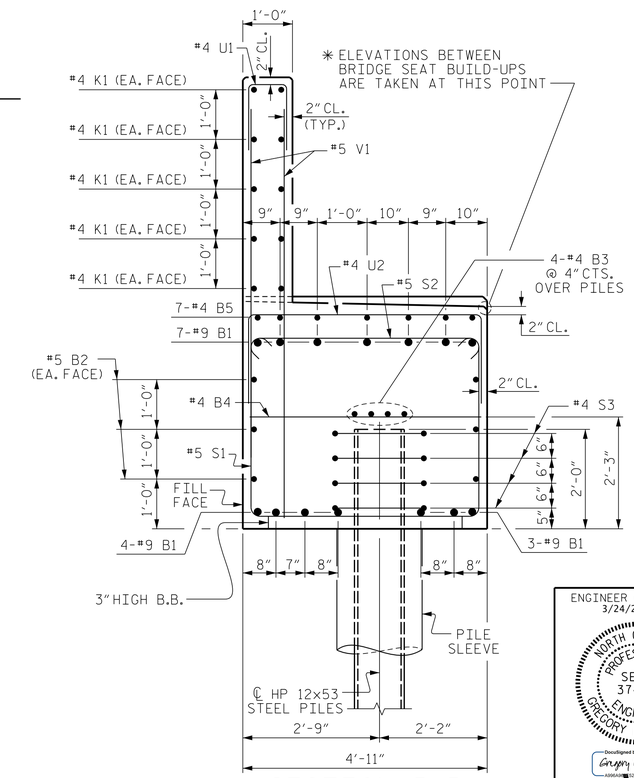

SECTION B-B

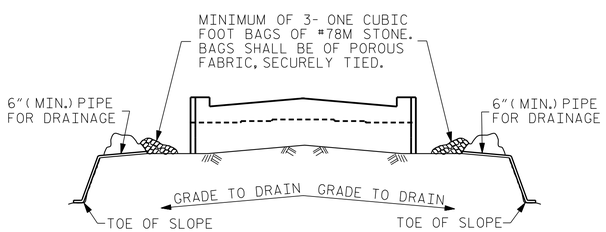

BAGGED STONE AND PIPE SHALL BE PLACED IMMEDIATELY AFTER COMPLETION OF END BENT EXCAVATION. PIPE MAY BE EITHER CONCRETE, CORRUGATED STEEL, CORRUGATED ALUMINUM ALLOY, OR CORRUGATED PLASTIC. PERFORATED PIPE WILL NOT BE ALLOWED.

BAGGED STONE SHALL REMAIN IN PLACE UNTIL THE ENGINEER DIRECTS THAT IT BE REMOVED. THE CONTRACTOR SHALL REMOVE AND DISPOSE OF SILT ACCUMULATIONS AT BAGGED STONE WHEN SO DIRECTED BY THE ENGINEER. BAGS SHALL BE REMOVED AND REPLACED WHENEVER THE ENGINEER DETERMINES THAT THEY HAVE DETERIORATED AND LOST THEIR EFFECTIVENESS.

NO SEPARATE PAYMENT WILL BE MADE FOR THIS WORK AND THE ENTIRE COST OF THIS WORK SHALL BE INCLUDED IN THE UNIT CONTRACT PRICE BID FOR THE SEVERAL PAY ITEMS.

TEMPORARY DRAINAGE AT END BENT

PROJECT NO. I-5987B

ROBESON COUNTY

STATION: 30+28.11 -Y6-

SHEET 3 OF 3

ENGINEER OF RECORD
3/24/2022

NORTH CAROLINA PROFESSIONAL SEAL 37400 ENGINEER GREGORY M. GILLAND

DocuSigned by: Gregory M. Gilland

WETHERILL ENGINEERING
1223 Jones Franklin Rd.
Raleigh, N.C. 27606
Bus: 919 851 8077
Fax: 919 851 8107
LICENSE NO. F-0377

STATE OF NORTH CAROLINA
DEPARTMENT OF TRANSPORTATION
RALEIGH

SUBSTRUCTURE
END BENT No. 2

REVISIONS								SHEET NO.
NO.	BY:	DATE:	NO.	BY:	DATE:			S8-25
1			3					TOTAL SHEETS
2			4					28

DOCUMENT NOT CONSIDERED FINAL UNLESS ALL SIGNATURES COMPLETED

DRAWN BY : D. HODGE DATE : 9/21
CHECKED BY : JAD/GMG DATE : 11/21

P:\2020\20380\01_I-5987B_I95\Structures\DGN\401_001_I5987B_SWU_EB_001.dgn
3/8/2022 3:32:26 PM