DocuSign Envelope ID: ADCF62AB-DD31-4A70-B60E-A7D0DA110522

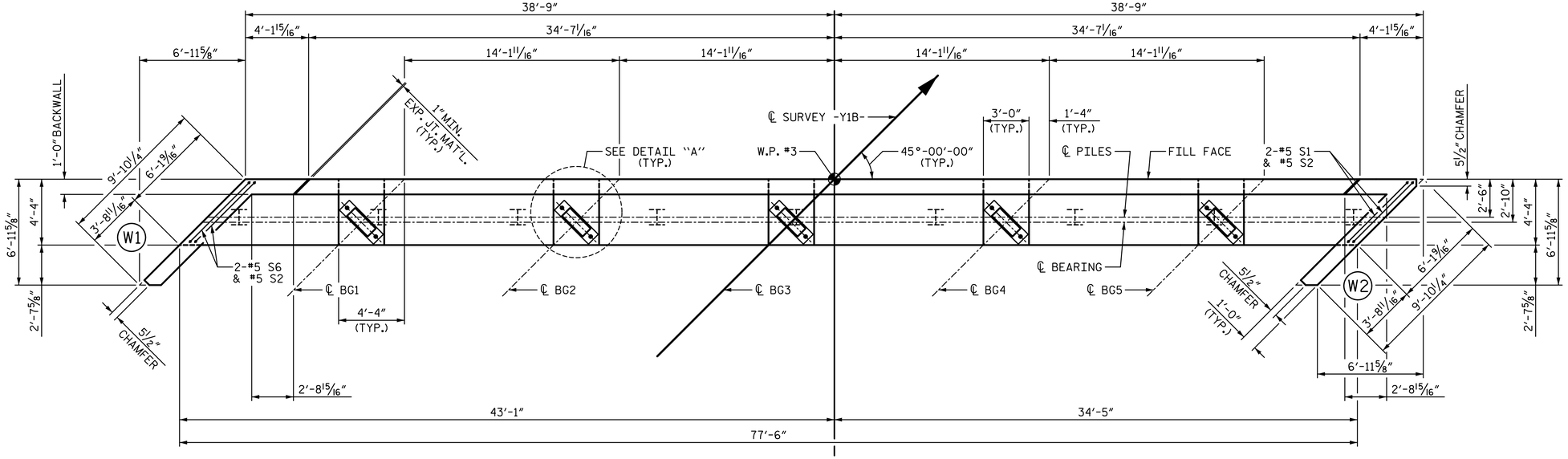

PLAN

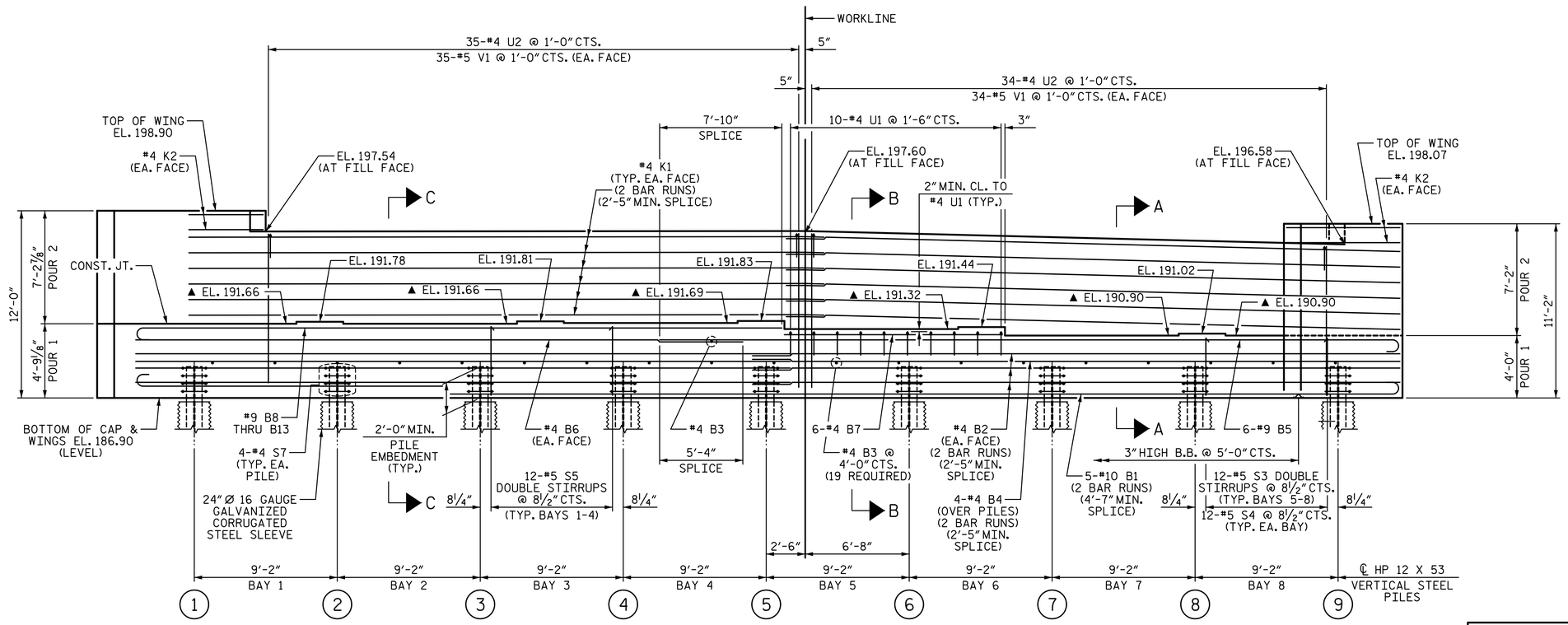

ELEVATION

NOTES:

STIRRUPS AND "U" BARS IN CAP MAY BE SHIFTED AS NECESSARY TO CLEAR ANCHOR BOLTS.

BACKWALL SHALL BE PLACED BEFORE APPLYING THE EPOXY PROTECTIVE COATING.

THE TOP SURFACE AREAS OF THE END BENT CAPS SHALL BE CURED IN ACCORDANCE WITH THE STANDARD SPECIFICATIONS EXPECT THE MEMBRANE CURING COMPOUND METHOD SHALL NOT BE USED.

THE TOP SURFACE OF THE CAP EXCEPT THE BRIDGE SEAT BUILDUPS SHALL BE SLOPED TRANSVERSELY FROM THE FILL FACE TO THE BACK FACE AT THE RATE 2%.

SEE GENERAL DRAWING "FOUNDATION LAYOUT" FOR ADDITIONAL NOTES FOR DRIVING PILES.

▲ FOR LOCATION OF ELEVATIONS BETWEEN BRIDGE SEAT BUILDUPS, SEE SECTIONS A-A AND B-B SHEET 3 OF 3.

WING LENGTHS BASED ON A 6" ASSUMED MSE RETAINING WALL THICKNESS.

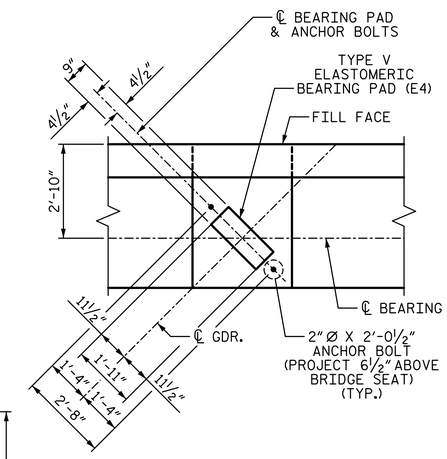

DETAIL "A"

(TYP. EA. GIRDER)

PROJECT NO. I-5987B

ROBESON COUNTY

STATION: 29+51.04 -Y1B-

SHEET 1 OF 3

STATE OF NORTH CAROLINA
DEPARTMENT OF TRANSPORTATION
RALEIGH

SUBSTRUCTURE

END BENT 2

WGI
5640 Dillard Drive, Suite 200
Cary, NC 27518
LICENSURE NO. C-4434

NORTH CAROLINA PROFESSIONAL SEAL 028255 ENGINEER DEBORAH A. SEALEY
3/21/2022

DOCUMENT NOT CONSIDERED FINAL UNLESS ALL SIGNATURES COMPLETED

REVISIONS						
NO.	BY:	DATE:	NO.	BY:	DATE:	
1			3			
2			4			

SHEET NO. S7-31

TOTAL SHEETS 37

DRAWN BY: T. BANKOVICH DATE: 3-22
CHECKED BY: D.A. SEALEY DATE: 3-22
DESIGN ENGINEER OF RECORD: D.A. SEALEY DATE: 3-22

3/21/2022 9:08:59 AM G:\Projects\2020\Division 6 (Mott Mac - NV5)\I-5987B\Structures\Site 7 (Y1B over L)\Drawings\Final\I5987B_SMU_E2.dgn