DocuSign Envelope ID: ADCF62AB-DD31-4A70-B60E-A7D0DA110522

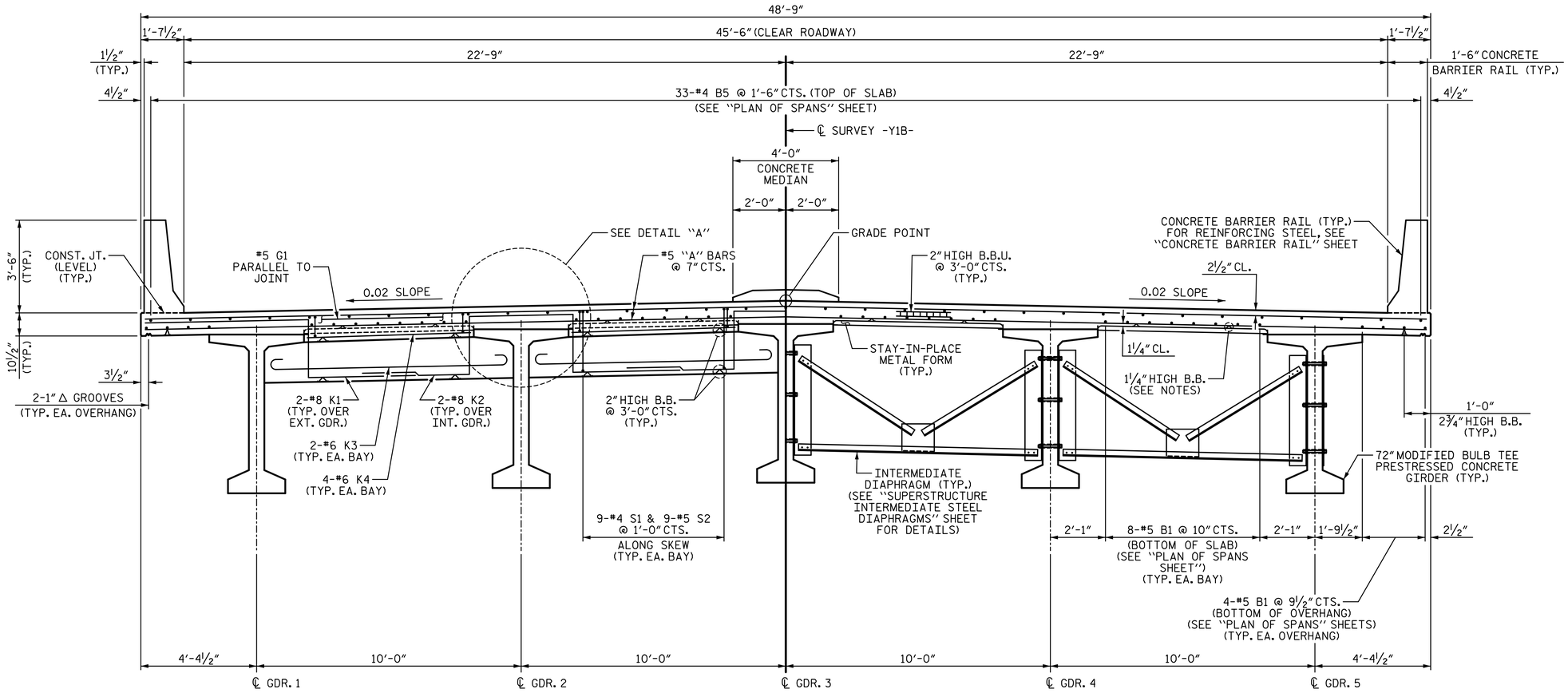

PARTIAL TYPICAL SECTION

(SHOWING END BENT DIAPHRAGMS)

PARTIAL TYPICAL SECTION

(SHOWING INTERMEDIATE DIAPHRAGMS)

NOTES:

PROVIDE 1¼" HIGH BEAM BOLSTERS UPPER AT 4'-0" CTS. ATOP THE STAY-IN-PLACE METAL FORMS TO SUPPORT THE BOTTOM MAT OF "A" BARS. WHEN USING REMOVABLE FORMS, PROVIDE CONTINUOUS HIGH CHAIRS FOR METAL DECK (C.H.C.M.) @ 4'-0" CTS. WITH A HEIGHT TO SUPPORT THE BOTTOM MAT OF "A" BARS A CLEAR DISTANCE OF 2½" ABOVE THE TOP OF THE REMOVABLE FORM.

LONGITUDINAL STEEL MAY BE SHIFTED SLIGHTLY, AS NECESSARY, TO AVOID INTERFERENCE WITH STIRRUPS IN PRESTRESSED CONCRETE GIRDERS.

CONCRETE BARRIER RAIL IN CONTINUOUS UNIT SHALL NOT BE CAST UNTIL ALL SLAB CONCRETE IN THAT UNIT HAS BEEN CAST AND HAS REACHED A MINIMUM COMPRESSIVE STRENGTH OF 3,000 PSI.

PREVIOUSLY CAST CONCRETE IN A CONTINUOUS UNIT SHALL HAVE ATTAINED A MINIMUM COMPRESSIVE STRENGTH OF 3,000 PSI BEFORE ADDITIONAL CONCRETE IS CAST IN THE UNIT.

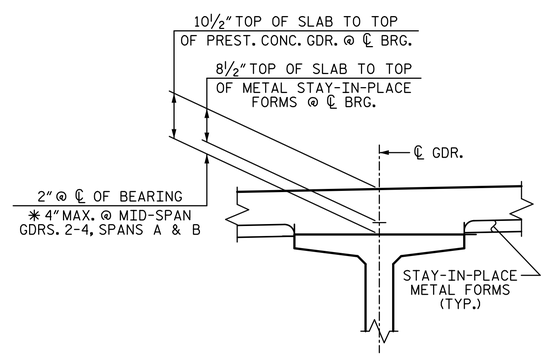

DETAIL "A"

(TYP. EA. GDR.)

(✳ BASED ON PREDICTED FINAL CAMBER AND THEORETICAL GRADE LINE ELEVATIONS)

PROJECT NO. I-5987B
ROBESON COUNTY
STATION: 29+51.04 -Y1B-

SHEET 1 OF 3

STATE OF NORTH CAROLINA
DEPARTMENT OF TRANSPORTATION
RALEIGH

SUPERSTRUCTURE

TYPICAL SECTION

WGI
5640 Dillard Drive, Suite 200
Cary, NC 27518
LICENSURE NO. C-4434

NORTH CAROLINA PROFESSIONAL SEAL 028255 ENGINEER DEBORAH A. SEALEY
3/21/2022

DOCUMENT NOT CONSIDERED FINAL UNLESS ALL SIGNATURES COMPLETED

REVISIONS						
NO.	BY:	DATE:	NO.	BY:	DATE:	
1			3			
2			4			

SHEET NO. S7-6
TOTAL SHEETS 37

DRAWN BY: T. BANKOVICH DATE: 3-22
CHECKED BY: D.A. SEALEY DATE: 3-22
DESIGN ENGINEER OF RECORD: D.A. SEALEY DATE: 3-22

3/21/2022 9:08:40 AM G:\Projects\2020\Division 6 (Mott Mac - NV5)\I-5987B\Structures\Site 7 (Y1B over L)\Drawings\Final\I5987B_SMU_TS.dgn